EVOX CP SERIES

Installation, Operation, Maintenance
Manual & Spare parts list

Bonfiglioli

ATEX INCLUDED

INSTALLATION, OPERATION AND MAINTENANCE MANUAL

Revisions

The revision list for this manual is given on page 38 . The most recent version of this manual is available from www.bonfiglioli.com.

1 GENERAL INFORMATION

1.1 PURPOSE OF THIS MANUAL

This manual has been prepared by the manufacturer in order to provide information regarding the safe transport, handling, installation, maintenance, repair, disassembly and disposal of the gearbox/gearmotor.
All necessary purchasing and design information is provided in the sales catalogue. Follow good engineering practices, read the information in this manual thoroughly and apply it rigorously. Information on any electric motor coupled to the gearbox must be obtained directly from the motor's own installation, operation and maintenance manual.
Failure to observe the information provided in this manual may result in risks to personal health and safety, as well as damage to equipment.
This information is originally provided in the manufacturer's own language (Italian), but may be made available in other languages to meet legal and commercial requirements.
This manual, along with all other relevant documentation, must be stored by personnel appointed to do so, in a suitable location, and in such a way that it is always available in good condition for consultation. In case of loss or damage, request a replacement directly from the manufacturer, quoting the code of this manual.
This manual reflects the conditions prevalent at at the time the gearbox was introduced.
The manufacturer reserves the right to modify, supplement and improve this manual in future, without this present revision being considered inadequate for that reason.

1.2 GLOSSARY, TERMS AND SYMBOLS

Some of the most frequently used terms in this manual are explained below to define their meaning clearly.
Scheduled maintenance: a set of operations required for maintaining the functionality and efficiency of the gearbox. These operations are usually scheduled by the manufacturer, who also establishes the competences and procedures required.
Unscheduled maintenance: a set of operations required for restoring the functionality and efficiency of the gearbox. These operations are not scheduled maintenance operations. In order to maintain the proper functioning and safety of the gearbox/gearmotor, we recommend that users have unscheduled maintenance performed by the manufacturer or by an authorised, specialist service centre. Contact the manufacturer's technical assistance service. Failure to comply with this requirement during the warranty period automatically invalidates the warranty.
Expert maintenance technician: an authorised technician who has the necessary qualifications, skills and mechanical and electrical training to perform scheduled maintenance on the gearbox.

SYMBOLS:

Particularly significant sections of the manual and important specifications are highlighted by symbols whose meanings are given below.

DANGER - WARNING
This symbol indicates situations of danger which, if ignored, may result in risks to personal health and safety.

CAUTION - ATTENTION
This symbol indicates the need to adopt specific precautions to avoid personal injury as well as damage to equipment.

IMPORTANT
This symbol indicates important technical information.

Instructions given in rectangles with a grey background, accompanied by the symbols , alongside or above, refer only to equipment that conforms to the "ATEX" Directive 2014/34/EU. Instructions marked in this way must only be performed by professionally qualified operators who are specially trained in the safety precautions required for working in potentially explosive atmospheres.
Failure to observe these instructions may result in serious safety and environmental risks.

1.3 REQUESTING TECHNICAL ASSISTANCE

For any technical service needs, contact the Manufacturer's sales network (www.bonfiglioli.com) quoting the information indicated on the unit's name plate, the approximate hours of service, the duty cycle and the type of defect.

1.4 MANUFACTURER'S LIABILITY

The Manufacturer declines all liability in the event of:
• use of the gearbox/gearmotor in contravention of local occupational health and safety legislation
• incorrect installation, disregard of or incorrect application of the instructions provided in this manual
• electrical power supply defects (for gearmotors and/or gearboxes with electrical devices)
• modifications or tampering
• work done on the gearbox by unqualified or unsuitable personnel

The functionality and safety of the gearbox also depends on the scrupulous application of the instructions given in this manual, in particular:
• Always operate the gearbox within its operating limits.
• Diligently observe the maintenance schedule.
• Ensure that only trained operators are authorised to inspect and service the gearbox.

• the configurations given in the gearbox catalogue are the only permitted ones
• do not attempt to use the unit in any other way
• the instructions given in this manual do not substitute but rather supplement the provisions of established safety legislation.

1.5 SUPPLEMENTARY INFORMATION

Additional information about the gearboxes described in this manual can be obtained from the sales catalogues, available on the website www.bonfiglioli.com.

2 SAFETY INFORMATION

2.1 SAFETY STANDARDS

Read thoroughly the instructions given in this manual and those printed directly on the gearbox, especially those regarding safety.

● Personnel appointed to work on the gearbox at any time during its service lifetime must be trained specifically for the purpose, must possess the necessary skills and experience, and must also be equipped with and trained to work with the appropriate tools and personal protection equipment required by the safety legislation applicable in the place where the gearbox/gearmotor is installed. Failure to meet these requirements constitutes a risk to personal health and safety.
● Keep the gearbox at its maximum efficiency by scrupulously following the maintenance schedule. Proper maintenance ensures maximum performance, extended service life and continued compliance with safety regulations.
● When working on the gearbox in areas that are difficult to access or hazardous, ensure that adequate safety precautions have been taken for yourself and others in compliance with applicable legislation on occupational health and safety.
● All maintenance, inspection and repairs must only be carried out by an expert maintenance technician fully familiar with the attendant hazards. It is therefore essential to implement operating procedures which address potential hazards and their prevention for the entire machine in which the gearbox is installed. Expert maintenance technicians must always work with caution and in observance of applicable safety standards.
● When working on the gearbox, wear the clothing and personal protective equipment specified in the manufacturer's instructions or required by the safety legislation applicable in the place where the gearbox is installed.
● Use only the lubricants (oil and grease) recommended by the manufacturer.
● Do not dump polluting materials into the environment. Dispose of all such materials as stipulated by applicable legislation.
● After changing lubricants, clean the gearbox and the walk-on surfaces around the work area.
● If the gearbox has to be serviced in a poorly lit area, use additional lamps and ensure that the work is done in compliance with all applicable safety legislation.
● During functional testing at the manufacturer's premises, the acoustic pressure measured under full load at a distance of 1 m from the gearbox and at 1.6 m above ground level, without vibration, was less than 85 dB(A). The gearbox is a component. The constructor of the plant or machine in which the gearbox is installed must therefore measure the level of noise emitted by the complete machine as required by the Machinery Directive 2006/42/EC. The vibrations produced by the gearbox do not constitute a health risk for personnel. Excessive vibration may be the result of a fault, and should be immediately reported and eliminated.

If a gearbox must be serviced in a potentially explosive atmosphere, the service engineer must first switch off power to its motor to ensure that it is out of service, and must take all necessary precautions against it being accidentally switched on again and against connected parts moving without warning.
All additional environmental safety precautions must also be taken (e.g. elimination of residual gas or dust, etc).

Unless they have backstop devices, gearboxes may reverse direction. If there is any risk of uncontrolled movement occurring in the event of a power failure (for example in load lifting applications), measures must be put in place to prevent such movement occurring (for example by using motors with brakes that engage automatically if the power fails).
If the gearbox is installed in a position that cannot be reached from the floor, the constructor of the plant or machine in which it is installed must provide, as necessary, suitable means for accessing a position from which the gearbox can be serviced.

The user is responsible for using the products recommended for the installation and maintenance of the gearbox in an appropriate manner and in accordance with the Manufacturer's instructions.

Before putting the gearbox into service, the user must ensure that the plant in which it is installed complies with all applicable directives, especially those regarding health and safety at work.

The constructor of the plant or machine in which the gearbox/gearmotor is installed must protect all rotating parts to prevent personnel coming into accidental contact and incurring a risk of crushing, cutting or entanglement, especially if the gearbox operates automatically and in an accessible area.

● Do not use high pressure jets of water to clean the gearbox.
● Only perform work on the gearbox when it is at a standstill.
● Protect the electric motor against accidental startup (e.g. by padlocking the main power switch or removing the power fuses). For this purpose, also affix a notice to the motor indicating that work is in progress on the gearbox.
● Do not perform welding work on the gearbox. Do not use the gearbox as an earthing post for welding operations because this could damage or destroy parts of the gear teeth and bearings.
● Switch off the motor immediately if any changes are noticed in the normal functioning of the gearbox, such as an abnormal increase in operating temperature or abnormal running noise.
● If the gearbox is to be installed in a plant or machine, the constructor of the said plant or machine is required to include the prescriptions, instructions and descriptions contained in this manual in the operating manual for the plant or machine.
● If the gearbox is installed in situations that are particularly hazardous to personal safety, or that could cause serious damage to equipment, or that involve high inertial loads, vibrations, etc., such as:
- suspended installations
- motors supported exclusively by the gearbox
- output shaft with shrink disc oriented downwards
suitable safety devices, such as harnesses, safety chains and restraining systems, etc. must be installed.

Depending on operating conditions, the outer surfaces of the gearbox may reach very high temperatures. Risk of burns!
When draining spent oil as part of an oil change, always bear in mind that hot oil can cause serious burns!
If the gearbox is equipped with a vent plug that incorporates a pressure relief valve, wait for the oil in the gearbox to cool before removing the plug, and beware of possible jets of oil during transport, lifting, installation, adjustment, operation, cleaning, maintenance, repair, dismantling and scrapping. Wait for the gearbox to cool before inspecting it.

3 TECHNICAL INFORMATION

3.1 EQUIPMENT IDENTIFICATION

The gearbox bears the following identifying nameplate. The nameplate provides essential information and specifications for correct and safe use. The designation of the gearbox is explained in the sales catalogue. If the gearbox is supplied fitted with a motor (gearmotor), all information regarding the motor itself is provided in the motor's own manual.

Nameplate information

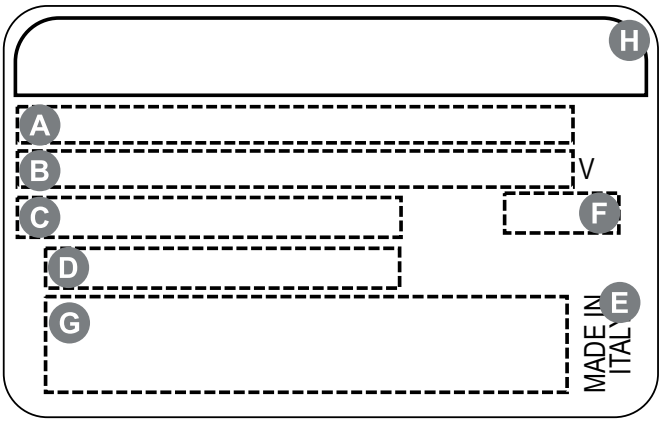

- A B Gearbox type
- C Product code
- D Serial number
- E Country of Production
- F Production unit code
- G Barcode
- H Name of manufacturer

Nameplate data for ATEX-specified gearboxes

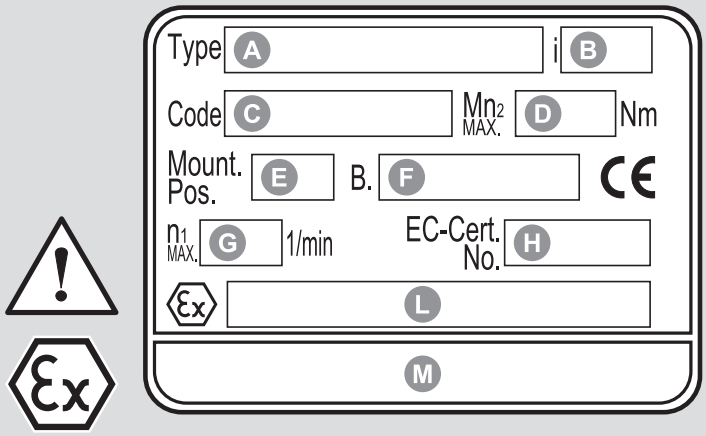

- A Gearbox type
- B Gear ratio
- C Product code
- D Transmissible torque [Nm] at n_1 = 1400 rpm
- E Mounting position
- F Month / Year of manufacture
- G Maximum drive speed
- H Deposited certificate no.
- L Specific code of the Atex marking
- M Name of manufacturer

CE - Ex Mark

- Environmental limits (ambient temperature range: - 20°C to + 40°C).
- Temperature class: **T4** for 2G and **135°C** for 2D. Some types of gearbox, as specified in the catalogue, are exceptions to this rule and are marked temperature class: **T3** for 2G or **160°C** for 2D.
- Notified body with whom the technical file has been deposited.

Legibility of the nameplate
The nameplate and the information thereon must be legible at all times. The nameplate should therefore be cleaned from time to time.
Always quote the identifying data on the nameplate in all correspondence with the manufacturer, when ordering spare parts, requesting information or arranging technical assistance.

3.2 DESCRIPTION OF THE EQUIPMENT

This gearbox has been designed and made for integration in an assembly of rigidly interconnected parts or mechanisms conceived to perform a specific application in which power may be provided by an electric motor.
Depending on the requirements of the application, the gearbox can be supplied in a variety of versions and configurations.
The gearbox is designed to satisfy specific requirements in the mechanical, chemical, agricultural and food industries, etc.
The manufacturer offers a range of accessories and optional variants to make gearboxes as versatile as possible. For further technical information and descriptions, refer to the relevant catalogue.
The user is responsible for using the products recommended for the installation and maintenance of the gearbox in an appropriate manner and in accordance with the manufacturer's instructions.

SAFETY SPECIFICATIONS FOR ATEX-COMPLIANT GEARBOXES
• Use only synthetic lubricants (oil and grease).
• Use only fluoroelastomer seals.
• Apply thread lock to all external bolts and plugs.
• Fit vent plugs with anti-intrusion valves.
• Fit double oil seals on the output shafts of gearboxes.
• Ensure that all components and products can resist temperatures above the maximum rated operating temperature.
• Ensure that there are no metal parts in sliding contact outside the gearbox.
• Ensure that plastic parts cannot accumulate an electrostatic charge, or are shielded if they can.
• Install irreversible heat sensors.
• Installations in zones 21 and 22 require the user to draft and implement a regular cleaning schedule for all surfaces and recesses to avoid the build-up of dust.
• To prevent dust building up in difficult to access areas, sealing devices, mounting flanges and external threads must be provided at all mobile couplings.

3.3 CONFORMITY

All gearboxes or gearmotors (when supplied with motor) are designed as state of the art devices in compliance with the provisions of applicable Essential Health and Safety Requirements.
All gearmotor motors conform to the provisions of the Low Voltage Directive 2006/95/EC and the Electromagnetic Compatibility Directive 2004/108/EC..

If specified for use in potentially explosive atmospheres, gearboxes must also be designed and constructed to conform with the Essential Health and Safety Requirements (EHSR) of Annex II of the ATEX Directive 2014/34/EU and must conform to the following classification:
● Equipment group: **II**.
● Category: Gas **2G** – Dust **2D**.
● Zone: Gas **1** – Dust **21.**
● Temperature class: **T4** for 2G and **135°C** for 2D.

3.4 OPERATING LIMITS AND CONDITIONS

The applications permitted by the Manufacturer are the industrial applications for which the gearbox has been designed.

Changes to the gearbox version or mounting position are only permitted if previously authorised by the manufacturer's technical assistance service.
Failure to obtain this authorisation invalidates the ATEX certification.

Refer to chapter "ALLOWED TEMPERATURE LIMITS" for the optimum ambient conditions.

The gearbox may not be used in areas and environments:

- **with highly corrosive/abrasive vapours, smoke or dust**
- **In direct contact with loose food products.**

Do not use the gearbox/gearmotor, if not explicitly intended for the purpose, in a potentially explosive atmosphere or where the use of explosion-proof equipment is specified.

The maximum surface temperature specified on the nameplate refers to measurements made in normal ambient and installation conditions.
Even minimal variations in these conditions (e.g. smaller mounting compartments, proximity of external equipment to the gear unit that generates heat and not provided by the manufacturer) may have a significant effect on heat dissipation.

3.5 ALLOWED TEMPERATURE LIMITS

Symbols	Description / Condition	Value (*)	
		Synthetic Oil	Mineral Oil
t_a	Ambient temperature		
$t_{au\ min}$	Minimum operating ambient temperature	**-30°C**	**-10°C**
$t_{au\ Max}$	Maximum operating ambient temperature	**+50°C**	**+40°C**
$t_{as\ min}$	Minimum storage ambient temperature	**-40°C**	**-10°C**
$t_{as\ Max}$	Maximum storage ambient temperature	**+50°C**	**+50°C**
t_s	Surface temperature		
$t_{s\ min}$	Minimum gearbox surface temperature starting with partial load (#)	**-25°C**	**-10°C**
$t_{sc\ min}$	Minimum gearbox surface temperature starting with full load	**-10°C**	**-5°C**
$t_{s\ Max}$	Maximum casing surface temperature during continuous operation (measured next to the gearbox input)	**+100°C**	**+100°C** (@)
t_o	Oil temperature		
$t_{o\ Max}$	Maximum oil temperature during continuous operation	**+95°C**	**+95°C** (@)

(*) = For further information about minimum and maximum values of different oil viscosity refer to the table “Selection of the optimal oil viscosity” on the catalog available on www.bonfiglioli.com

(@) = Continuous operation it is not advised if t_s and t_o range is 80°C to 95 °C.

(#) = For full load start-up it is recommended to ramp-up and provide for greater absorption of the motor. If needed, contact Bonfiglioli Technical Service.

4 HANDLING AND TRANSPORT

Personnel authorised to handle packages must take all necessary precautions to safeguard their own safety and that of all other persons involved.

4.1 PACKAGING SPECIFICATIONS

Unless otherwise agreed, standard packaging, if supplied, is not rainproof. This type of packaging is intended for shipping by ground and not by sea, and for storage in areas which are under cover and not humid. The material can be stored in suitable conditions for a period of two years under cover at a temperature within the limits specified in the chapter "ALLOWED TEMPERATURE LIMITS" and at a relative humidity not in excess of 80%. Storage in all other conditions requires specific packaging.
In order to facilitate handling, heavy packages can be loaded on pallets.

The most frequent types of packaging are shown in the figures below.

Standard carton pallet packaging.

Horizontal packaging

Vertical packaging

Special wooden crates.

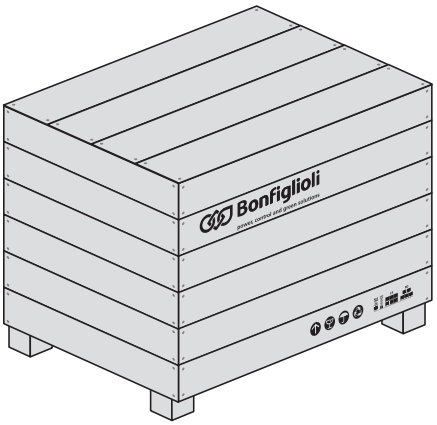

On receipt of the gearbox, make sure the delivery corresponds to the purchase order and that it is not damaged or faulty in any way. Report any problems to the Manufacturer's sales network.

Dispose of packaging materials as stipulated by applicable legislation.

4.2 HANDLING INSTRUCTIONS

Handle packages according to the instructions provided by the manufacturer on the packages themselves, if present. If the weight and shape of the packages makes manual handling unfeasible, use special equipment to avoid damage and injury. Personnel authorised to use lifting and moving equipment must be trained and experienced in the operations required in order to avoid risks to themselves and other persons.

4.2.1 Moving the packages

● Prepare a suitable, delimited area with a level floor or surface for unloading the packages.
● Prepare the equipment required for handling the package. The lifting and handling equipment (e.g. crane or lift truck) must be of adequate capacity for the weight and size of the load, taking into account its attachment points and centre of gravity. If required, this information is indicated on the package itself. Harness heavy packages with chains, belts and steel ropes after checking that they are suitable for the weight of the load, which is always specified.
● When handling the load keep it level horizontally to avoid tipping and instability.

4.2.2 Moving the equipment

All the following operations must be carried out with the greatest care and attention to avoid sudden movements during the handling of the gearbox.

When lifting the gearbox, only use accessories such as eyebolts, shackles, safety hooks, straps, ropes and hooks, etc. that are fully certified and adequate for the load to be lifted.
Do not use eyebolts on the motor to lift gearmotors.

Miscellaneous accessories (e.g. connecting flanges, etc.) and/or motors coupled to the gearbox may significantly alter the centre of gravity and impair stability. Use an additional lifting point in such cases, if necessary.

During lifting operations, the load must not be allowed to swing beyond an arc of ± 15°.
If greater swinging movements occur during movement, stop and repeat the operations for the lifting system adopted.

To rotate the gearbox, use the same attachment points used to lift it and proceed as instructed for lifting. Rotate the gearbox as near as possible to a supporting surface. Pay special attention to the location of the centre of gravity to prevent the load from becoming unbalanced as it is being rotated. Lifting gear must be attached in such a way that it cannot slip off or move, as this could cause the load to fall. This is especially important if the gearbox is being rotated using slings or ropes, since these are particularly prone to slipping off their attachment points.

When manually lifting small size gearboxes (weighing less than 15 kg), always wear suitable clothing as well as gloves and safety footwear.

● Identify the attachment points for lifting the gearbox, as shown in the drawings.
● Prepare the gearbox for lifting by attaching straps, hooks, etc. to its attachment points, or alternatively use a pallet for moving the load. When using a crane, first lift the gearbox vertically out of its packaging.
● If using a fork lift or pallet truck, remove the packaging and insert the forks at the positions provided.
● Lift the load very slowly and to a limited height above the ground, and check that it is stable.
● Move the gearbox to the unloading area and lower it gently into position, taking care not to cause sudden oscillations while moving it.

The following pages illustrate in detail the different lifting methods to be adopted for the gearbox sizes and configurations described in this manual. The most suitable solution for the safe lifting and moving of each product is shown.

Legend:

Type of lifting	Manual	With mechanical lifting equipment	
Symbol	**M**	**A**	**B**
Approx. weight	≤ 15 Kg	> 15 Kg	
Requirement	—	Recommended method for positioning	Recommended method for moving and positioning
Warning	—	The load may be unstable	The load may sway or oscillate
Solution	—	Slide the lifting ring to align it with the load's centre of gravity as shown in the diagrams below. Lock the ropes below the ring with a cable clamp or similar device to prevent them from sliding, then lift the load. Observe all precautions regarding the handling of loads.	Stabilise the moving load by hand. Observe all precautions regarding the handling of loads.

Serie CP

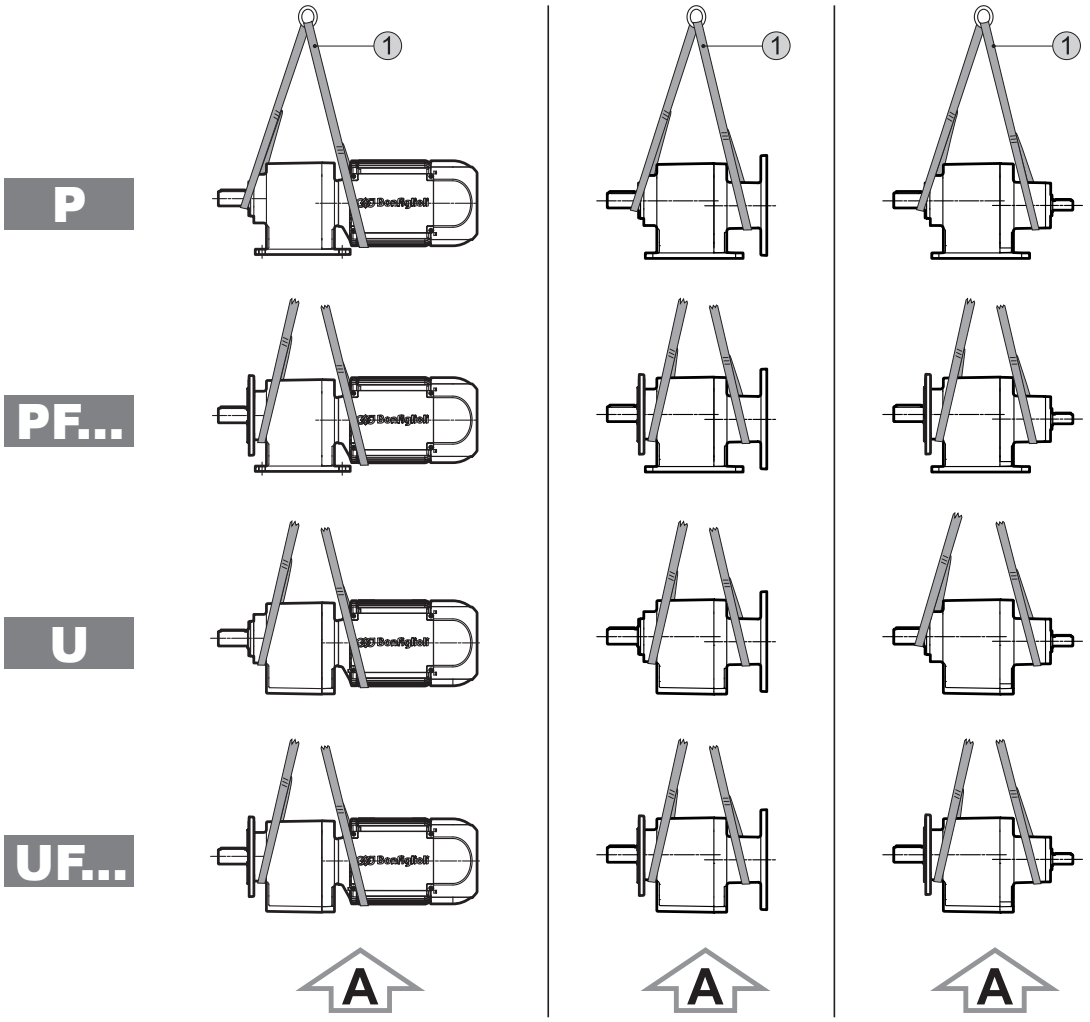

	M05	M10	M20	M25	M30	M35	M40		
CP 07	M	M	—	—				M	—
CP 17	M	M	A	—				M	M
CP 37	A	A	A	A				A	A
CP 47	A	A	A	A				A	A
CP 57									
CP 67									

① Strap and ring

M Lift manually (weight ≤ 15 kg)

A Lift according to drawing A

Maximum tilt permitted during movement: 15°

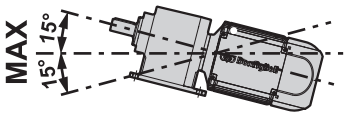

4.3 STORAGE

Place the gearbox/gearmotor on a stable base and make sure that there is no risk of it moving or falling off.

The following recommendations should be followed when storing the gearbox/gearmotor.
1.Do not store the unit in excessively humid conditions or where it is exposed to the weather (i.e. outdoors).
2.Avoid excessive variations in temperature as this can cause condensation inside the gearbox and its accessories.
3.Do not place the gearbox directly on the ground.
4.Store the packaged gearbox (if allowed) in accordance with the instructions on the packaging itself.

If the gearbox/gearmotor is stored temporarily outdoors it must be protected to ensure that humidity and foreign matters cannot penetrate to the interior.

If the gearbox is to be stored for more than 6 months, the following additional precautions must be taken.
5.Coat all external machined surfaces with a protective anti-corrosion product such as Shell Ensis SX (or a product with similar properties and application range). Check the surfaces regularly and re-apply the protective coating as necessary.
6.Fill the gearbox with lubricating oil and replace any vent plugs with blind plugs. This operation does not apply to gearboxes that are lubricated for life (see the “LUBRICATION” section).

PRECAUTIONS to be taken when preparing gearboxes for service after storage.

Thoroughly clean the output shaft and external surfaces to remove all rustproofing products, contaminants and other impurities (using a standard commercial solvent). Do this outside the explosion hazard area.

Do not allow solvent to come into contact with seal rings as this may damage them and cause them to leak.

If the oil or protective product used during storage is not compatible with the synthetic oil required for service, clean out the inside of the gearbox thoroughly before filling with the service oil.

Storage for periods of over 1 year reduces the service life of bearing grease. Bearing grease must be synthetic.

5 INSTALLATION

5.1 INSTALLING THE GEARBOX

All phases of installation and maintenance must be taken into consideration from the machine design stage. Design personnel must, if necessary, implement a safety plan to protect the health and safety of all persons directly involved and to ensure the rigorous application of all relevant legislation.

It is essential for impact and stress to be avoided during the installation process.

Before installing a gearmotor, also refer to the instructions contained in the installation and user manual for the electric motor.

Before installing the gearbox:

1. Drain out the oil used for storage if it is not the same as the oil used for normal functioning, and flush the inside of the gearbox out thoroughly (see the “LUBRICATION” section in this manual).
2. Carefully remove all packaging and protective coatings from the gearbox suitable solvents. Take special care when cleaning mating surfaces. Avoid getting solvents on the shaft seal rings.
3. Check that the data on the nameplate correspond to those specified in the order.
4. Ensure that the structure in which the gearbox is to be mounted is sufficiently robust and rigid to support its weight and operating forces. If normal service is likely to involve impacts, extended overloads or possible seizures, fit the necessary hydraulic couplings, clutches, torque limiters, etc..
5. Check that the machine in which the gearbox is to be installed is switched off and cannot be accidentally started up.
6. Check that all coupling surfaces are flat.
7. Check that the shaft/shaft or shaft/ bore are perfectly aligned for coupling.
8. Fit suitable guards to prevent accidental contact with rotating parts outside the gearbox.
9. If the work environment is corrosive for the gearbox or any of its parts, follow the special precautions required for aggressive environments. Contact the manufacturer’s technical assistance service for further details.
10. **We recommend applying a protective paste such as Klüberpaste 46 MR 401 (or a product with similar properties and application range) to all key type couplings to ensure optimal coupling and protection against fretting corrosion. Clean all friction couplings thoroughly but do not apply any protective pastes to them.**
11. Thoroughly clean all other contact surfaces (feet, flanges, etc.) and apply a suitable protective product to them to prevent oxidation.
12. Mechanical organs keyed on to the solid gearbox output shafts must be machined to an ISO H7 tolerance to prevent couplings from seizing and to prevent irreparable damage to the gearbox during installation.
13. In outdoor installations, protect the gearbox and its motor from direct sunlight and inclement weather by means of canopies or covers. Make sure that the assembly is properly ventilated.
14. Make sure that the casing of the gearbox is connected to the equipotential protection (earth/ground) circuit of the machine in which it is installed.

15. Evaluate whether accessible surfaces may exceed the temperature limits established in EN ISO 13732-1 on the basis of the gearbox conditions of use and ambient temperatures; if these limits can be easily reached or exceeded, the surfaces in question must be protected to prevent contact (by means of guards and/or lagging). Wherever impossible, signs bearing symbol 5041 of IEC standard 60417 “Warning! Hot surfaces” must be displayed in such a way that they are clearly visible to machine operators (bearing in mind the position and orientation of the gearbox). Refer to chapter "ALLOWED TEMPERATURE LIMITS" for further details.

Symbol 5041 of IEC standard 60417 “Risk of burns! Hot Parts”

Proceed as follows to install the gearbox.

16. Place the gearbox in the vicinity of the installation area.
17. Mount the gearbox and secure it to the structure at the fixing points provided. Secure the gearbox to the structure using all the fixing points on the relevant mounting (foot or flange).
18. Tighten the fixing bolts to the torque values given in the following table.

(tab 1)

Bolt size	Fixing bolt tightening torque [Nm]		
	Bolt class		Stainless steel
	8.8	**10.9**	
	+5% /-10%		+5% /-5%
M2.5	0.75	—	—
M3	1.34	—	—
M4	3	4.5	2.1
M5	5.9	8.9	4,2
M6	10.3	15,3	7.3
M8	25.5	37	18
M10	50	73	35
M12	87.3	127	61
M14	138.3	201	150
M16	210.9	314	—
M18	306	435	—
M20	432	615	—
M22	592	843	—
M24	744	1060	—
M27	1100	1570	—
M30	1500	2130	—
M33	1850	2600	—
M36	2350	3300	—
M39x3	3200	4500	—
M42x3	4050	5700	—

In general, 8.8 grade bolts are sufficient for correct installation. Under particularly harsh operating conditions, grade 10.9 bolts can also be used.
If grade 10.9 bolts are used, make sure that the structure in which they are fitted is of adequate strength. Do not use bolts graded higher than 8.8 to install gearboxes with mounting elements (casing, flange or foot) made from aluminium.

19. Fill the gearbox with oil or top up as necessary, as instructed in the “LUBRICATION” section in this manual.
20. Check that all service plugs are tightened to the torque values given in the following table.

(tab 2)

Plug/vent thread	Pitch (threads per inch)	Tightening torque [Nm]	
		Plugs with non-metallic gasket	Plugs with metallic gasket
		+5%/-5%	
1/8”	28	5	10
1/4”	19	7	10
3/8”	19	7	20
1/2”	14	14	30
3/4”	14	14	40
1”	11	25	40
M14x2	2 [mm]	20	—

Installing ATEX-specified gearboxes

• Category 2D gearboxes must be installed in compliance with the provisions of standards EN 1127-1, EN 61241-14 and EN 61241-17. Installation technicians must be fully qualified to work in potentially explosive atmospheres.

• Installation technicians must be aware of the ATEX classification of the installation area, must understand the risks associated with potentially explosive atmospheres with particular reference to explosion and fire hazards, and must adopt all necessary safety precautions.

• All maintenance, assembly and disassembly work must be done **by specialist personnel outside the explosion hazard area.**

• Check that all accessory components (cables, joints, cable clamps, heat exchangers, etc.) also comply with the requirements of the ATEX directive. Handle all components with extreme care to avoid altering their characteristics.

• For gearboxes in category 2D, insert the supplied screws into the threaded holes not used for fixing the gearbox (eg. Provision for output flange). The screws should be placed "flush" on the surface and locked with Loctite 510, or similar product for properties and application range. Take care not to damage the mating surfaces.

• Do not connect any object with an electrical resistance greater than 10^9 Ω to the gearbox.

• Install guards to prevent hazardous accumulations of dust and liquids at the seals of protruding shafts and to protect them mechanically.

• The gearbox input speed (or the speed of the motor coupled to it) must not exceed the speed shown on the name plate.

• When installing a gearmotor with the electric motor arranged vertically with its shaft facing down, the motor must be covered by a protective canopy.

• The output shaft and any pulleys or other transmission components must be perfectly aligned.

• Only install the gearbox with the motor version and in the mounting position specified in the order.

• Secure the gearbox to a flat, vibration-free surface capable of bearing the torsional stresses it produces in service. Take care not to deform mating surfaces, mounting feet or flanges by over-tightening fixing bolts.

• Use bolts graded no lower than 8.8 for mounting the gearbox. For heavy duty installations 10.9 grade bolts can be used. Do not use bolts graded higher than 8.8 to install gearboxes with mounting elements (casing, flange or foot) made from aluminium. See the “INSTALLING THE GEARBOX” section in this manual for tightening torque values. To stop mounting bolts becoming loose, apply Loctite 510 (or a product with similar properties and application range) to the threads of all bolts securing the gearbox to the machine structure and to the electric motor, also apply it to the threads of all the oil plugs (even on those eventually removed for oil level check, before their relocation).

• Make sure that overhung and thrust loads and operating torques do not exceed those for which the gearbox is specified.

• Make sure that oil level plugs are easy to access for inspection.

• Clean the gearbox thoroughly after installation.

5.1.1 Gearboxes with solid shafts (input and output)

Do not use hammers or other tools which might damage the gearbox shafts or bearings to fit external parts. Proceed as shown below, following the recommendations given in the "Installing connecting elements" section in this manual:

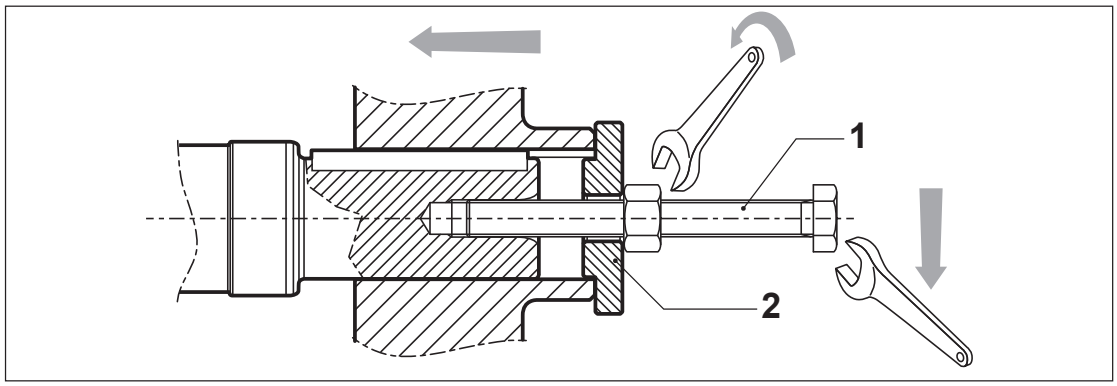

Bolt (1) and spacer (2) shown above are not included in the supply.

To minimise the loads on the shaft bearings, when mounting transmission mechanisms with asymmetrical hubs use the configuration shown in diagram (A) below:

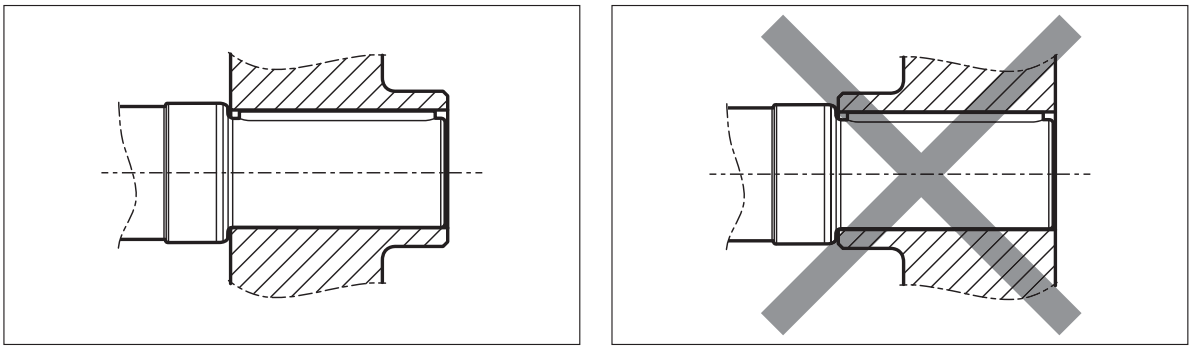

(A)

5.2 INSTALLING AN ELECTRIC MOTOR WITH AN IEC STANDARD FLANGE

• Thoroughly clean and degrease all the mating surfaces between the motor and the gearbox (shafts and flanges).
• Do not force the surfaces together or use inappropriate tools to couple them. Take care not to damage the flat and/or cylindrical mating surfaces.
• Do not strain the coupling shafts with large thrust or overhung loads.
• To facilitate assembly, use a synthetic oil-based lubricating paste such as Klüberpaste 46 MR 401 (or a product with similar properties and application range).
• Tighten all the motor/gearbox fixing bolts to their prescribed torques. See the “INSTALLING THE GEAR-BOX” section in this manual for tightening torque values.

When the gearbox is to be coupled to a standard electric motor conforming to IEC 60072-1, proceed as follows.
• Apply a layer of sealant such as Loctite 510 (or a product with similar properties and application range) to the motor/gearbox coupling flanges, to the alignment ring and the frontal mating surfaces as shown in the figure below.

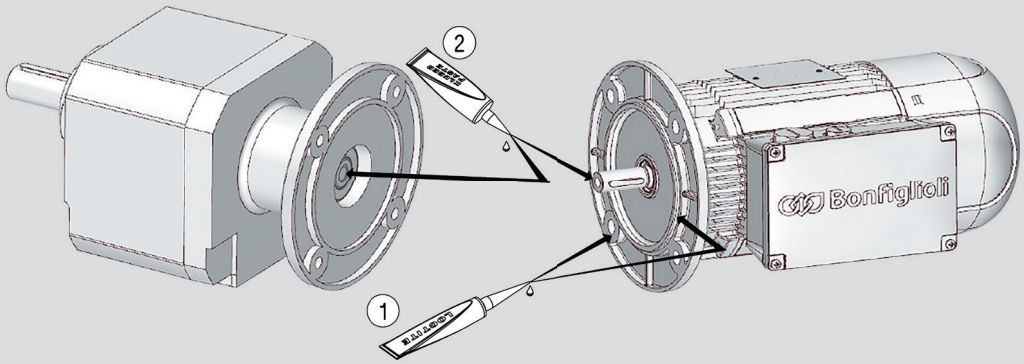

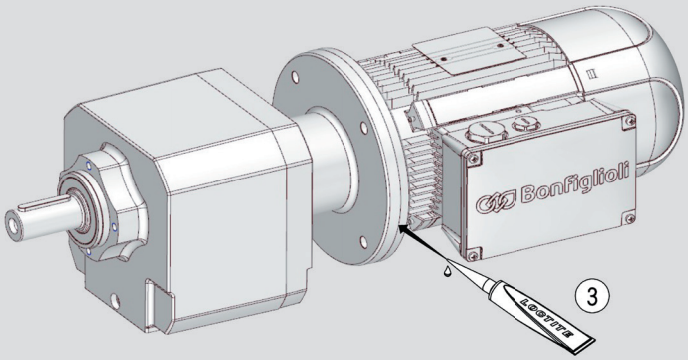

1. Apply Loctite 510 to the flat surface of the flange and to the alignment ring.
2. Apply Klüberpaste 46MR401 to the inside of the gearbox input shaft and to the motor shaft.
3. Seal the join between the gearbox and the motor with Loctite 5366, taking care to fill any gaps between the two flanges (e.g. recesses for decoupling the units).

• With the motor coupled to the gearbox, apply a film of sealant such as Loctite 5366 (or a product with similar properties and application range) around the edges of the flanges to seal any gaps between their surfaces.
• If the output shaft is also equipped with a flange, the user must take similar precautions to prevent dust accumulating in the gaps between the flanges or in the vicinity of moving couplings.

5.3 INSTALLING CONNECTING ELEMENTS

Use the utmost caution when installing the various components, to ensure that no damage is caused to the gearbox and its parts, such as oil seals and mating surfaces, or internal parts such as gears and bearings.

Make sure that you have access to suitable lifting equipment to perform the installation operations correctly.

When installing external transmission parts do not use hammers or other unsuitable tools, to avoid the risk of damaging the gearbox shafts or supports.

When installing connecting elements it is advisable to preheat them slightly. Take the following precautions when doing so:

Adopt protection against contact with hot parts: risk of burns!

Protect the oil seals from damage and accidental overheating to avoid impairing their functionality (use a heat shield to protect against radiated heat).

The connecting or transmission elements must not transmit static or dynamic external loads to the shafts unless said loads have been calculated at the time of gearbox selection.

If the element to be coupled to the shaft is not fixed axially by the interference of the coupling, utilise suitable retaining components to prevent axial movement of the element in question on the shaft.

5.4 BACKSTOP DEVICE (optional variants AL, AR)

The backstop device ensures that the gearbox only turns in one direction, and prevents reverse movement caused by the load applied to the output shaft. The device consists of a free wheel mechanism.

Before putting the gearbox into service, ensure that the output shaft turns freely in the required direction of travel without having to apply excessive force.

It is essential to prevent the motor from rotating in the wrong direction to avoid damaging the backstop device or the gear train.

5.5 PAINTING AND SURFACE PROTECTION

Gearboxes with optional protection to class C3 or C4 are available in the colours listed in the following table.

(tab 3)

PAINTING	Colour	RAL number
RAL7042 *	Traffik Grey A	7042
RAL5010	Gentian Blue	5010
RAL9005	Jet Black	9005
RAL9006	White Aluminium	9006
RAL9010	Pure White	9010
RAL7035	Light Grey	7035
RAL7001	Silver Grey	7001
RAL7037	Dusty Grey	7037
RAL5015	Sky Blue	5015
RAL5024	Pastel Blue	5024

* Gearboxes are supplied in this standard colour if no other colour is specified.

When no specific protection class is requested, the painted (ferrous) surfaces of gearboxes are protected to at least corrosivity class C2 (UNI EN ISO 12944-2). For improved resistance to atmospheric corrosion, gearboxes can be delivered with C3 and C4 surface protection, obtained by painting the complete gearbox.

If the gearbox has to be painted, protect the nameplate and seal rings against contact with paint and solvent.
Do not paint the mating surfaces that will be used for the final installation (foot or flanges). If mating surfaces are painted, carefully check that the gearbox is rigidly mounted and that its shafts are correctly aligned on completion of the installation.
Contact the manufacturer's technical assistance service before painting any control devices fitted to the gearbox.

5.6 LUBRICATION

The gearboxes are supplied with a "lifetime" lubricant charge (if not in combination with the SO option) or according to customer specifications.
In gearboxes lubricated "for life" and in the absence of contamination from the outside, it is not usually necessary to periodically replace the lubricant. If option SO is selected, the gearbox can be filled with a unique drain / filling plug between the feet (CP 07… 47) and with a filling plug on the input flange (CP 57, CP 67).

These gear units can be mounted in every mounting position possible as standard. The EVOX CP is supplied as standard with long life oil fill and a unique oil level for each mounting position; if the SO option is selected, the Gear Unit can be filled with a unique drain/fill plug between the feet (CP 07… 47) and with a filling plug on the input flange (CP 57, CP 67).

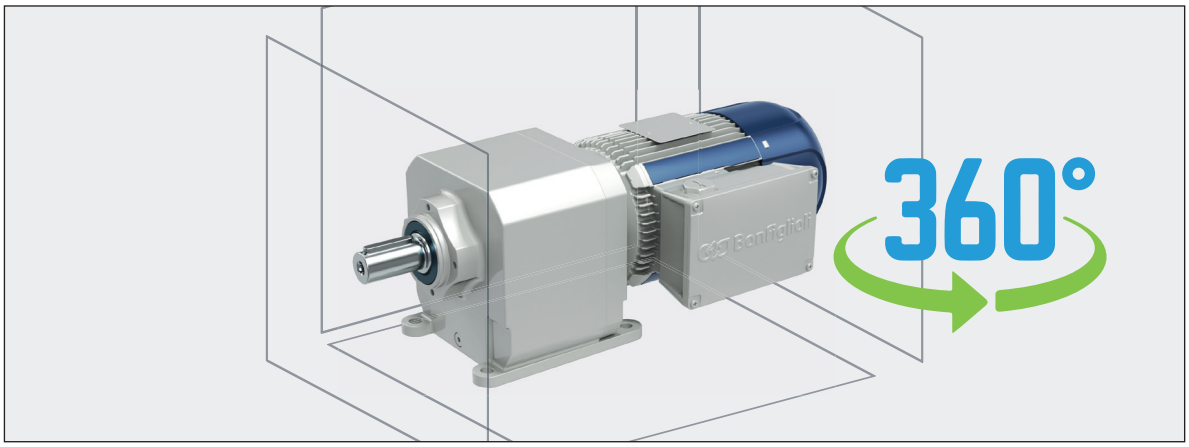

Mounting position limitations

Reinforced output bearings option [OHA - OHR], if you need EVOX CP with both:
• OHR or OHA,
• Vertical position with the output shaft on top, or a position within 60° from it, facing any direction,
Contact Bonfiglioli's Technical Service and check if the standard oil level is correct for your application, or if you require a tailored solution.

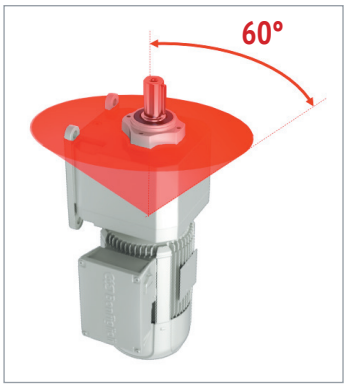

The lubricant utilised must be new and uncontaminated and can be poured in through the drain/filler hole using a filler filter with 25 µm mesh.

Do not mix oils of different makes or specifications. Make sure also that the oil is highly resistant to foaming and is EP (Extreme Pressure) rated.

If you do not have the same type of oil, completely drain the gearbox and flush it out thoroughly with the new oil to remove all traces of the old oil and any contaminants from inside the casing before filling the gearbox with the new oil.

Gearboxes are not equipped with oil level plugs, for further information on these types of gearbox, refer to the "SCHEDULED MAINTENANCE" section of this manual.
Before installing these gearboxes, check the oil level as instructed below.
1) Place the gearbox in the horizontal mounting position.
2) Using the service plug identified with the yellow color, screw the check rod plug (supplied with the gearbox) up to the stop.
3) Wait a few seconds before unscrewing the rod cap, and taking care not to touch the internal parts of the reducer casing, remove the cap.
4) Check that the rod has wet the notch of the gearbox for which the check is being carried out.
5) If the test reveals a different indication and therefore an incorrect quantity of lubricant, restore the correct level according to the indications in this manual.
Only use recommended oils to fill and top up the gearbox.

5.6.1 Recommended / permitted lubricants

Lubricants for ATEX-specified gearboxes

Greases:
• Klüber Asonic GHY 72 (for bearings)
• Klüber Klüberquiet BQ 72-72 (for bearings)
• Klüberpaste 46 MR 401 (for easy engagement of cylindrical couplings)
• ITP Fluorocarbon gel 880 (for lubricating sliding seals)

Oils (alternatives to Shell Omala S4 WE 320 - standard supply):
• Shell: Tivela Oil S320
• Klüber: Klübersynth GH 6 320
• Total: Carter SY 320
• Mobil: Glygoyle 320
• Castrol Alphasyn PG 320

5.6.1.1 Compatible greases

● Klüber Staburags NBU 8 EP (for bearings)
● Klüberpaste 46 MR 401 (to facilitate the coupling of cylindrical parts)
● ITP Gasket Seal (to grease contact seals)

5.6.1.2 Synthetic oils and minaral oils with EP (Extreme Pressure) additives

The gearbox can be filled with different oils type, depending on the application needs. È possibile scegliere l'opzione SO del riduttore e riempire il riduttore con uno degli oli elencati nella tabella seguente.

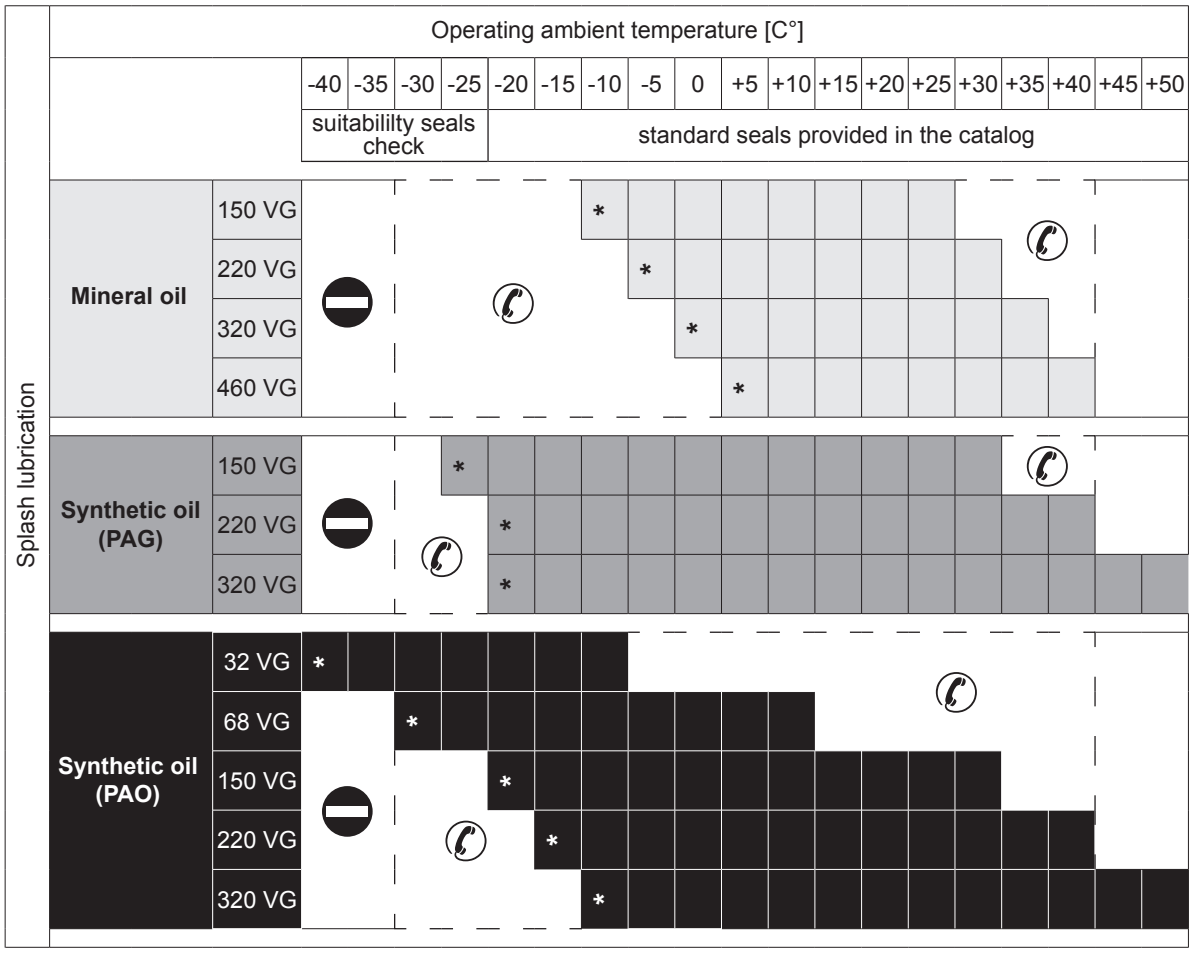

Recommended use.

Permitted use.

Use not permitted.

* = It is recommended to ramp-up and to provide for greater absorption of the motor.
If needed and in the event of impulse loads, contact Bonfi glioli Technical Service.

5.6.2 Quantity of lubricant

The quantities of lubricant specified in the following table are purely indicative.
Gearboxes with level plugs correctly located for the mounting position must be filled to the mid point of the sight glass, or to the reference notch on the dipstick, or until oil starts to flow out of the plug hole, depending on the type of level plug.

In the case of gearboxes normally supplied lubricated for life (see table 7), but supplied without lubricant and with no level plug, consult the manufacturer's technical assistance service.

(tab 4)

[l]		
		Any mounting positions
		Quantity [l]
CP 07	Any inputs	0.35
CP 17		0.7
CP 37		1
CP 47		1.8
CP 57		2.1
CP 67		2.9
CP 07 ... CP 67	**Quantity tolerance**	
	±10% / 0	

ATEX versions gearboxes are supplied with lubricant. Before installing the gearbox and putting it into service, always check the oil level as instructed in the "SCHEDULED MAINTENANCE" section of this manual.

If the Gear Unit is equipped with the EX option, only 6 mounting positions are available. The unique oil level allows you to fit EVOX CP in any of the 6 standard positions with a single product code; however, any degree variation in both directions should be avoided.

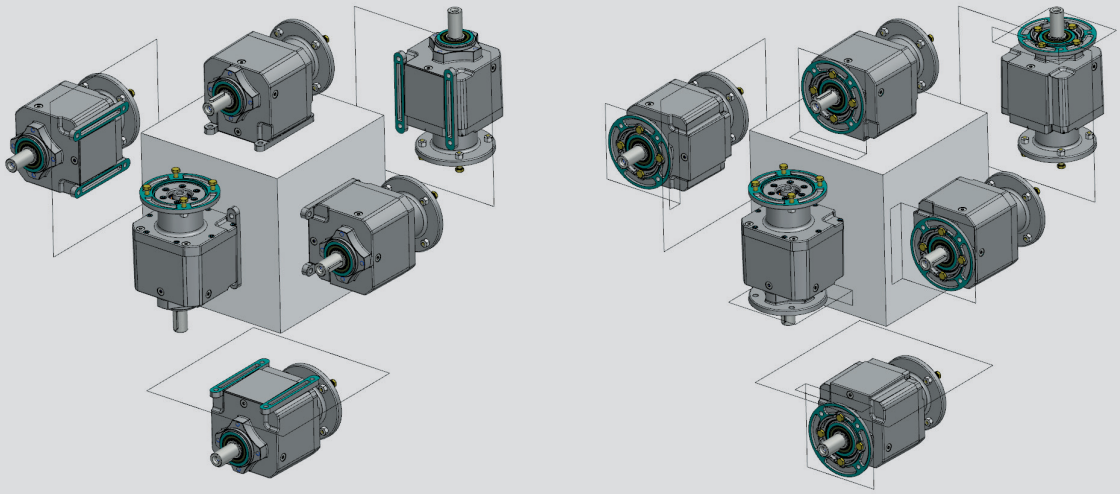

The quantities of lubricant specified in the table (Tab. 4) are purely indicative.
In this case too, before installing the gearbox and putting it into service, check the oil level as instructed in the "SCHEDULED MAINTENANCE" section of this manual.

5.6.3 Mounting positions and service plugs

Legend:

Filling plug Level plug Drain plug

CP 07 ... CP 67

CP_P - CP_PF CP_U - CP_UF

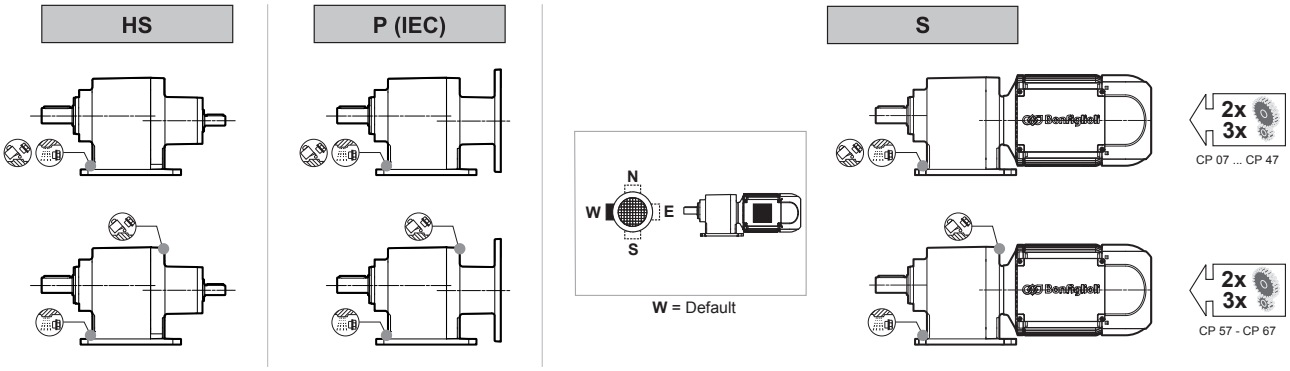

CP 07 ... CP 67

CP_P - CP_PF CP_U - CP_UF

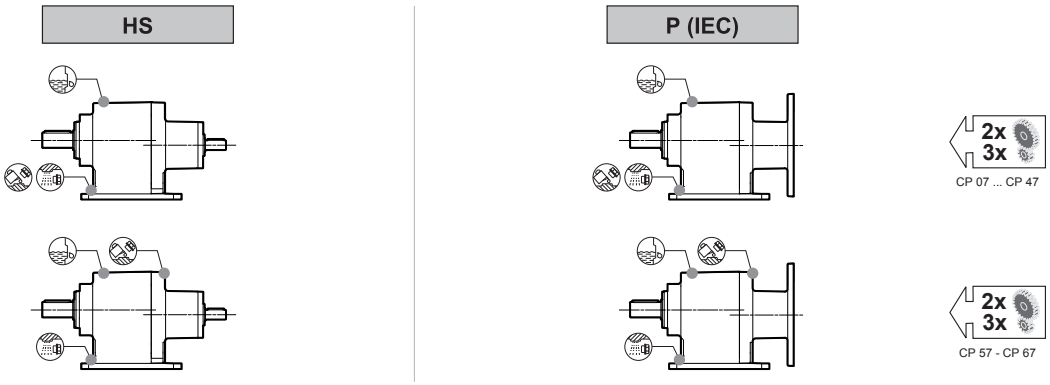

5.7 PUTTING THE GEARBOX INTO SERVICE

The gearbox has been tested in the factory by the manufacturer.

Before starting it up, make sure:
● That the machine or part of the machine in which the the gearbox/gearmotor is to be installed has been declared to conform to the requirements of the Machinery Directive 2006/42/EC and to any other relevant and applicable safety standards.
● That the electrical power supply is suitable and operational as prescribed in EN 60204-1 and is correct grounded
● That the rating of the power supply to the motor and any installed electrical devices corresponds to that prescribed and is within ±10% of the rated value.
● That the oil level in the gearbox/gearmotor and any lubricated accessories is as required and that there are no leaks from any plugs, seals or pipes.
● That any parts and/or accessories disconnected for transport purposes have been reconnected.
● That any of original guards removed for transport purposes have been refitted.

On startup of the gearbox/gearmotor:
● Check that there are no unusual noises and/or vibrations.
● After the first 100 hours of operation, check the tightening torque of all bolt couplings:
- machine side flanges
- motor flanges
- supports

Before putting the gearbox into service, make sure that:
● Assembly will not be carried out in a potentially explosive atmosphere (oil, acid, gas, vapour, radiation) and that dust deposits on the gearbox do not exceed 5 mm in depth.
● Clean the gearbox thoroughly after installation.
● The oil level and drain plugs are all easily accessible.
● All guards designed to prevent accidental contact between operators and rotating parts, and all oil seals, are fully efficient.
● All types of accessory installed on the gearbox are ATEX specified and have been installed in accordance with ATEX requirements.

During service make sure that:
● The gearbox is sufficiently ventilated and that it is not subject to radiation from external heat sources.
● The temperature of the cooling air does not exceed 40°C.

Measuring the gearbox surface temperature
• The gearbox maximum surface temperature depends on motor speed, transmission ratio and motor version, but must never exceed the value stated on the nameplate.
• The maximum surface temperature specified on the nameplate refers to measurements made in normal ambient and correct installation conditions. Even minimal variations in these conditions (e.g. smaller mounting compartments) may have a significant effect on heat dissipation.
• When putting the gearbox into service, the surface temperature must be measured in the same conditions as those in which the gearbox will operate. The surface temperature must be measured at the coupling between the gearbox and motor, and at the points which are most shielded from the forced ventilation provided by the motor fan.

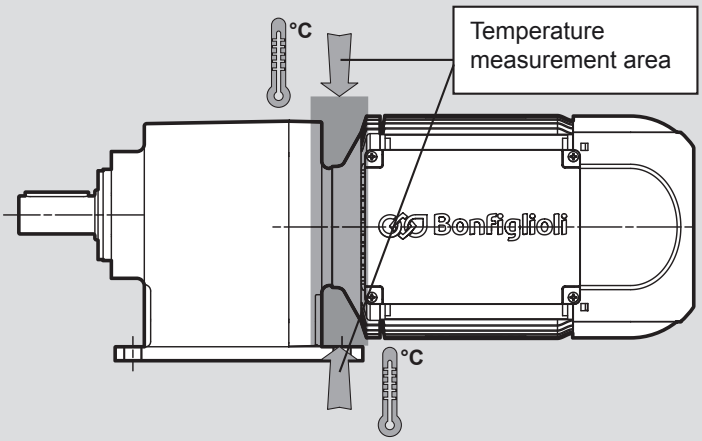

IMPORTANT:
Maximum surface temperature is reached after 3 hours operation at full load. Maximum surface temperature measured at these points must not exceed ambient temperature by more than 75 K (ΔT).

If the temperature differential exceeds this value, stop the gearbox at once and contact the manufacturer's technical assistance service.

• If the temperature differential lies within the above value, wait for the gearbox to cool down and then install the heat sensor included in the supply at the point of maximum temperature.

Example:

• Check that the gearbox functions normally (no unusual vibrations and/or noise).

● Provided all the above checks have been completed positively, and provided all the instructions in this manual have been strictly observed, an electric motor with ATEX rating equal to or higher than that of the gearbox may be installed to form a gearmotor that complies with the provisions of Directive 2014/34/EU.
● If, on the other hand, the motor and gearbox have been coupled in a way other than that prescribed in this manual, or if one or more of the instructions provided in this manual has been ignored, the user must perform a risk assessment specific to the motor-gearbox coupling.
● Risk assessment is mandatory if the motor is to be powered by an inverter. Only if this is done and self-certification issued by the assembler will the complete assembly in which the gearbox is installed conform to the requirements of Directive 2014/34/EU. The inverter control system must not allow the motor to exceed the gearbox maximum input speed (n_1=1500 min^{-1}) or to generate overloads under any circumstances.

6 MAINTENANCE

Maintenance and replacement work must be carried out by expert maintenance technicians trained in the observance of applicable laws on health and safety at work and the special ambient problems attendant on the installation. In order to maintain the proper functioning and safety of the gearbox/ gearmotor, we recommend that users have non-routine maintenance performed by the Manufacturer or an authorised, specialist service centre. Contact the manufacturer's sales network. Failure to comply with this requirement during the warranty period automatically invalidates the warranty.

Never improvise repairs.

Before doing any work on the unit, the operator must first switch off power to the gearbox and ensure that it is out of service, as well as taking all necessary precautions against it being accidentally switched on again or its parts moving without warning (due to suspended loads or similar external factors).
Furthermore, all additional environmental safety precautions must be taken (e.g. elimination of residual gas or dust, etc.).

• Disconnect power to the machine in which the gearbox is installed before commencing any maintenance work, and secure all switches in the OFF position. All persons performing maintenance must secure the disconnecting switches for themselves, using personal devices (e.g. padlocks) the keys of which they must keep with them for the duration of the work.
• Ensure surfaces have cooled before commencing work. If necessary, wear anti-burn safety gloves when working on gearboxes. Refer to chapter "ALLOWED TEMPERATURE LIMITS" for further details.
• Before commencing any maintenance work, activate all the safety devices provided and, if necessary, inform persons working in the vicinity. Cordon off the area around the gearbox and prevent access to any equipment which, if activated, might be the cause of unexpected health and safety hazards.
• Replace worn components with original spare parts.
• Use only recommended lubricants (oil and grease).
• When working on the gearbox, always replace all gaskets and seals with original new ones.
• If a bearing requires replacement, it is good practice to replace the other bearing on the same shaft as well.
• Change the oil after completing maintenance work.
• If, during work, there is any risk of coming into contact with oils and greases, respect the safety precautions provided on the manufacturer's data sheets and use all items of personal protective equipment specified therein.

If the gearbox is not going to be used for a prolonged period following installation or run-in, it must be run at least once a month. If this is not possible, the gearbox must be protected against corrosion with a suitable rust inhibitor, or completely filled with new oil of the type normally utilised for operating duty. (See the "STORAGE" section in this manual.)

The above instructions are aimed at ensuring the efficient and safe operation of the gearbox.
The manufacturer declines all liability for injury to persons or damage to components due to the use of non-original spare parts or non-routine work that compromises safety requirements without express prior authorisation. Refer to the specific spare parts catalogue when ordering spare parts for the gearbox.

Do not disperse contaminant liquids, worn parts and maintenance residues in the environment. Dispose of all such substances in strict compliance with applicable statutory legislation.

• Respect scheduled inspection and maintenance intervals to ensure the correct functioning of the gearbox and the effectiveness of the explosion protection.
• Allow the gearbox to cool down completely before servicing or repairing internal components in order to avoid burns from hot internal parts.
• On completion of maintenance work, make sure that all safety devices have been applied and reset.
• Clean the gearbox thoroughly after maintenance or repair.
• On completion of maintenance, tighten all filler and drain plugs to the torque values specified in the “INSTALLING THE GEARBOX” section of this manual.
• Apply fresh Loctite 510 paste (or a product with similar properties and application range) to all disassembled threads (bolts and plugs).
• On completion of any maintenance work, renew all seals and re-apply sealing compound as specified. On gearboxes with double seal rings, the space between the two rings must be packed with synthetic grease such as Fluorocarbon 880 ITP gel (or a product with similar properties and application range).
• Whenever a seal ring is replaced, its lips should be smeared with a thin layer of grease such as Fluorocarbon 880 ITP gel (or a product with similar properties and application range) before it is fitted.
• Use only original spare parts for repairs.

6.1 CHECKING OPERATIONAL EFFICIENCY

● Periodically remove any dust from the gearbox and motor casings.
● Check that the noise generated at constant load does not vary. Excessive vibration or noise can indicate wear of the gear train or failure of a bearing.
● Check power absorption and voltage against the nominal values given on the motor’s nameplate.
● On brake motors, check the friction surfaces and friction material for wear and adjust the gap if necessary.
● Check for lubricant leaks from the gaskets/seals, plugs, casings and pipes.
● Check that temperature does not rise above normal operating levels (refer to chapter "ALLOWED TEMPERATURE LIMITS") unless this is justified by a corresponding increase in the applied load, rotation speed, ambient temperature or other factor. If temperature rises, stop the gearbox immediately and identify the cause of the fault.
● Check all bolt couplings for wear, deformation and corrosion and tighten the bolts correctly, without exceeding the torque values specified in the “INSTALLING THE GEARBOX” section in this manual.

6.2 ROUTINE MAINTENANCE

Respect the manufacturer's routine maintenance schedule to keep the gearbox at peak efficiency. Good maintenance ensures maximum gearbox performance, extended service life and continued compliance with safety regulations.

List of routine checks
We recommend keeping a checklist of inspections so that any changes in individual control parameters can be identified rapidly and easily.

Gearboxes lubricated for life do not require periodic oil changes. Check monthly, if the unit is running in intermittent duty, or more frequently if the service is continuous.

(tab 5)

Inspection parameter	Frequency
Oil changes	In case of contamination
Noise, vibration	24 h
External condition of gearbox (fouling, oil deposits)	170 h ... 720 h
Oil leaks, external seals and gaskets	720 h
Oil level	720 h
Tightness of fixing bolts, connecting flanges and torque transmission components	2000 h ... 4000 h
Check the elastic elements in all joints for wear (where required)	2000 h ... 4000 h
Alignment of gearbox shafts with respect to coupled machine shaftsat each oil change	9000 h ... 18000 h

For installations in zones 21 and 22, the user must schedule and implement a regular cleaning programme for all surfaces and recesses to avoid dust build-ups of more than 5 mm in depth.
Every 100 hours of operation or every 2 weeks:
• Measure the surface temperature at the coupling between the gearbox and motor, and at the points most shielded from the forced ventilation provided by the motor's fan. Maximum surface temperature measured at these points must not exceed ambient temperature by more than 75 K, and this temperature differential must not have been exceeded in service. Check the condition of the heat sensor installed previously.

Example:

Limit temperature exceeded

Limit temperature NOT exceeded

Also check that high temperatures are not being generated at the gearbox bearings.

Every 1000 hours of operation or every 6 month:
• Check the oil level according to the tables provided in the "LUBRICATION" section of this manual and according to the figures below.
• Check that there are no signs of lubricant leaks near the gearbox.
• If any anomalies are found, identify their cause, make the necessary repairs, and top up the lubricant level before putting the gearbox back into service.

Every 5000 hours of operation:
• Replace all externally accessible seal rings unless this has already been done as a result of problems occurring before the scheduled maintenance was due.

Every 5000 hours of operation at rated torque
(The minimum overhaul interval specified here may increase considerably, depending on actual service cycles. See the table below).
• General overhaul of the gearbox, if not performed earlier as a result of malfunctioning *(Overhaul consists of the replacement of all bearings and/or other mechanical components showing signs of wear that might compromise the functioning of the gearbox).*

(tab 6)

$\frac{M_{n2}}{M_{r2}}$	**Interval (hours)**
1.0	5000
1.25	10000
1.5	17000
1.75	27000
2.0	40000

M_{n2} = Rated torque at output shaft.
M_{r2} = Required torque at output shaft

Gearboxes are fitted with yellow oil level plugs. Level plugs is of the spill type or may require a dipstick (supplied) to be inserted.

It may be necessary to remove the gearbox in order to place it in the correct position. Refer to the fi gures on the following pages for further information.

Atex specified gearboxes (all mounting positions) do not have a oil level plug. On these gearboxes, oil level must be checked through a dedicated hole as instructed below.

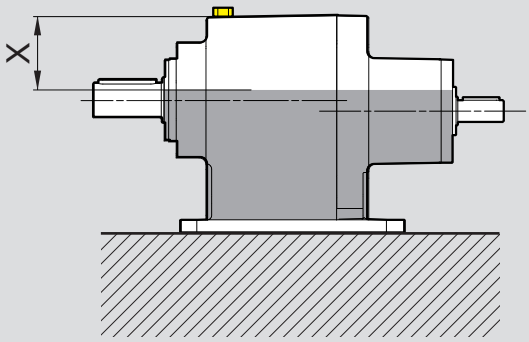

(tab 7)

Any mounting position		
		X [mm]
CP 07	Any inputs	22.5
CP 17		31
CP 37		36.5
CP 47		46.5
CP 57		34
CP 67		56
CP 07 ... CP 67	**Quantity tollerance**	**Tollerance X value**
	±10% / 0	0 / -3 mm(*)

To check the oil level, proceed as follows:

1) Place the gearbox in the horizontal mounting position as shown in the figure.
2) Using the service plug identified with the yellow color, screw the check rod plug (supplied with the gearbox) up to the stop.
3) Wait a few seconds before unscrewing the rod cap, and taking care not to touch the internal parts of the gearbox casing, remove the cap.
4) Check that the rod has wet the notch of the gearbox for which the check is being carried out.
5) Compare with the "X" dimension indicated in this table.
6) The value found must be less than or equal to that indicated in the table for the checked gearbox size.

(*) If during the check phase, the quantity of oil exceeds the indicated tolerance of 0 /-3mm, the gearbox must be prepared for emptying until the indicated quantity is reached.

6.3 OIL CHANGES

1.Place a suitable container under the drain plug.
2.Remove the filler and drain plugs and allow the oil to drain out.
3.Wait for a few minutes to ensure all the oil has drained out.
4.Enter the appropriate amount of oil. Restore the type of oil indicated on the nameplate. Refer to chapter "Lubrication" for further details.

Apply Loctite 510 (or a product with similar properties and application range) on the thread of plugs.

See the “Lubrication” section in this manual for details of the quantity of oil required.

Lubricants, solvents and detergents are toxic/harmful to health:
- they may cause irritation in direct contact with the skin
- they may cause intoxication if inhaled
- they may be fatal if swallowed.
Handle them with care using suitable personal protection equipment. Do not dump them into the environment and dispose of in accordance with applicable legislation.

If a leak is found, identify the cause of the fault and repair it before topping up the lubricant and operating the unit.

6.4 CLEANING

To clean dust, dirt and process residues off the gearbox, do not use solvents or other products that might be incompatible with the materials from which it is made, and do not direct high pressure jets of water on to the gearbox.

7 REMOVAL

7.1 REMOVING A MOTOR WITH AN IEC STANDARD FLANGE

If the mobile coupling between the motor and the gearbox has not rusted badly during service, it should be possible to remove the motor without applying excessive force once the screws coupling it to the gearbox have been removed.
If it proves difficult to remove the motor, do not use screwdrivers or levers to apply force as this may damage the flanges and mating surfaces. Proceed as illustrated below instead.

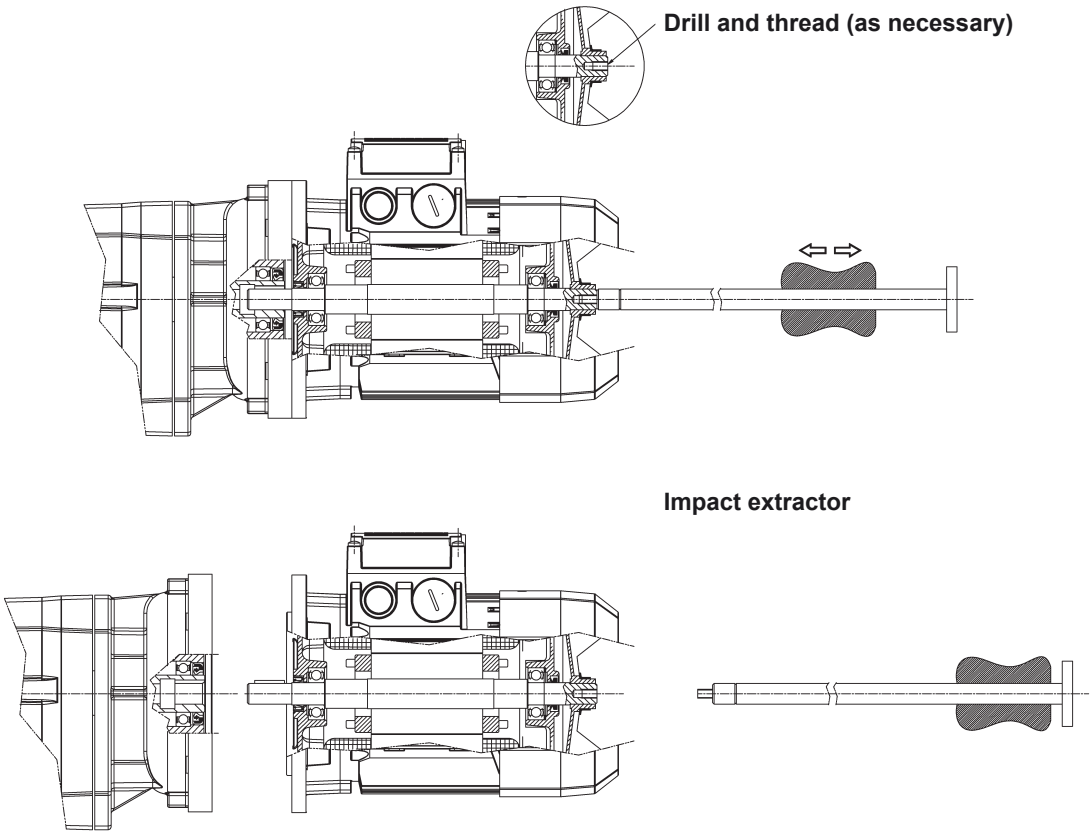

1.Drill and thread the fan end of the drive shaft if it is not already threaded.
2.Screw in an impact extractor.
3.Undo the bolts fixing the motor to the gearbox.
4.Use the impact extractor to detach the motor.

8 TROUBLESHOOTING

The following information is intended to serve as an aid in locating and eliminating defects and faults. In some cases, such problems may be caused by the plant or machine to which the gearbox is assembled and hence, the cause and remedy will be described in the Manufacturer's technical documentation for the machine/plant in question.

If any components fail or require replacement as a result of levels of wear likely to compromise the functioning of the gearbox, contact the Manufacturer's sales network.

(tab 8)

FAULT	CAUSE	REMEDY
Bearing temperature too high.	Oil level too low.	Top up oil level.
	Oil too old.	Change oil.
	Bearings faulty.	Contact authorised workshop.
Operating temperature too high.	Oil level too high.	Check oil level.
	Oil too old.	Change oil.
	Oil contaminated.	Change oil.
Abnormal running noise.	Gears damaged.	Contact authorised workshop.
	Excessive axial play in bearings.	Contact authorised workshop.
	Bearings faulty or worn.	Contact authorised workshop.
	Excessive load applied.	Bring external loads into conformity with rated values specified in sales catalogue.
	Oil contaminated.	Change oil.
Abnormal noise at gearbox mounting.	Mounting bolts loose.	Tighten bolts to specified torque.
	Mounting bolts worn.	Replace mounting bolts.
Oil leaks.	Oil level too high.	Check oil level.
	Casing/coupling seals inadequate.	Contact authorised workshop.
	Gaskets worn.	Contact authorised workshop.
Gearbox does not run or runs with difficulty.	Oil viscosity too high.	Change oil (see recommended lubricant table).
	Oil level too high.	Check oil level.
	Excessive load applied.	Redesign transmission system to suit actual load.
Output shaft does not turn with motor running.	Gears damaged.	Contact authorised workshop.

9 DISPOSING OF THE GEARBOX

Make sure that the gearbox cannot function accidentally while it is being taken out of service.

The gearbox/gearmotor must be disposed of in compliance with environmental legislation, and the various materials used in its manufacture must be delivered to an authorised disposal/recycling centre.

The gearbox must only be taken out of service by operators trained in the observance of applicable laws on health and safety at work.
Do not dump non-biodegradable products, lubricants and non-ferrous materials (rubber, PVC, resins, etc.) into the environment. Dispose of all such materials as stipulated by current environment protection laws.

Do not re-use parts or components which appear to be in good condition after they have been checked and/or replaced by qualified personnel and declared unsuitable for use.

INDEX OF REVISIONS (R)

	BR_IOM_EVO_CP_ATX_ENG_R00_0

We reserve the right to modify the information given herein without prior notification.
This manual may not be reproduced, even partially, without express authorisation.
This edition cancels and replaces all previous editions and revisions.

We have a relentless commitment to excellence, innovation & sustainability. Our team creates, distributes and services world-class power transmission & drive solutions to keep the world in motion.

HEADQUARTERS

Bonfiglioli S.p.A
Registered office: Via Cav. Clementino Bonfiglioli, 1
40012 Calderara di Reno - Bologna (Italy)
Tel. +39 051 6473111

Head office: Via Isonzo, 65/67/69
40033 Casalecchio di Reno - Bologna (Italy)