Conductivity, pH/ORP & Disinfection

W600 Series
Water Treatment Controllers

Providing powerful programming and complete control in a broad range of water treatment applications

KEY BENEFITS

- Large touchscreen display with icon based programming makes setup easy
- Universal sensor input provides extraordinary flexibility; the same controller can be used with almost any type of sensor needed
- Combination Sensor Input and Analog Input board that add even more flexibility
- Lead/Lag control of up to 6 relays
- Optional dual analog (4-20 mA) input for Fluorometers or nearly any other process value
- Multiple language support allows simple setup no matter where your business takes you
- Six control outputs allow the controller to be used in more applications
- Economical wall-mount package for easy installation
- On-screen and web page graphing of sensor values and control output status
- Two Virtual Inputs that are calculated from two real inputs (cycles of concentration, % rejection, etc.)
- The W600 with amperometric chlorine sensors can be used for reporting chlorine residual measurements in accordance with EPA Method 334.0.
- Complete flexibility in the function of each relay
- Datalogging
- Emailing Alarm messages, Datalog, Graph, or System Summary reports
- Ethernet option for remote access via the Internet, LAN, BACnet or Modbus/TCP

Scan QR code with your smartphone camera for more details!

ABOUT US

Walchem integrates its advanced sensing, instrumentation, fluid pumping and communications technologies to deliver reliable and innovative solutions to the global water treatment market. Our in-house engineering is driven by quality, technology and innovation. For more information on the entire Walchem product line, visit: www.walchem.com

WALCHEM

IWAKI America Inc.

SPECIFICATIONS

INPUTS

Power
100-240 VAC, 50 or 60 Hz, 7A max Fuse: 6.3 Amp

Sensor Input Signals (0, 1 or 2 depending on model code)

Contacting Conductivity: 0.01, 0.1, 1.0, or 10.0 cell constant, or
Electrodeless Conductivity (not available on the combination sensor/analog input card) or Disinfection or
Amplified pH, ORP, or Ion Selective Electrode which requires a preamplified signal. ±5VDC power available for external preamps. Walchem WEL or WDS series pH/ORP sensors recommended.
Each sensor input card contains a temperature input.
Temperature: 100 or 1000 ohm RTD, 10K or 100K Thermistor

Analog (4-20 mA) Sensor Input (0, 1, 2 or 4 depending on model code)

2-wire loop powered and self-powered transmitters supported
3-wire and 4-wire transmitters supported
Each dual sensor input board has two channels: Channel 1, 130 ohm input resistance and Channel 2, 280 ohm input resistance. The combination input board has one channel, 280 ohm input resistance.
Available Power: One independent isolated 24 VDC ±15% supply per channel. 1.5 W maximum for each channel. 2W (83 mA at 24 VDC) total power consumption for all channels (four total channels possible if two dual boards are installed; 2W is equivalent to 2 Little Dipper sensors)

Digital Input Signals (6):

State-Type Digital Inputs
Electrical: Optically isolated and providing an electrically isolated 9V power with a nominal 2.3mA current when the digital input switch is closed. Typical response time: < 2 seconds. Devices supported: Any isolated dry contact (i.e. relay, reed switch). Types: Interlock

Low Speed Counter-Type Digital Inputs
Electrical: Optically isolated and providing an electrically isolated 9V power with a nominal 2.3mA current when the digital input switch is closed, 0-10 Hz, 50 msec minimum width. Devices supported: Any device with isolated open drain, open collector, transistor or reed switch.
Types: Contacting Flowmeter

High Speed Counter-Type Digital Inputs
Electrical: Optically isolated and providing an electrically isolated 9V power with a nominal 2.3mA current when the digital input switch is closed, 0-500 Hz, 1.00 msec minimum width. Devices supported: Any device with isolated open drain, open collector, transistor or reed switch. Types: Paddlewheel Flowmeter

OUTPUTS

Powered Mechanical Relays (0 or 6 model code dependent)

Pre-powered on circuit board switching line voltage
All relays are fused together as one group, total current must not exceed 6A (resistive), 1/8 HP (93W)

Dry Contact Mechanical Relays (0, 2 or 4 model code dependent)

6 A (resistive), 1/8 HP (93W)
Dry contact relays are not fuse protected.

Pulse Outputs (0, 2 or 4 model code dependent)

Opto-isolated, solid-state relay, 200mA, 40V DC
VLOWMAX = 0.05V @ 18mA

4 - 20 mA (0 or 2 model code dependent)

Internally powered, Fully isolated
600 Ohm max resistive load, Resolution 0.0015% of span
Accuracy ± 0.5% of reading

MEASUREMENT PERFORMANCE

	Range	Resolution	Accuracy
0.01 Cell Contacting Conductivity	0-300 µS/cm	0.01 µS/cm, 0.0001 mS/cm, 0.001 mS/m, 0.0001 S/m, 0.01 ppm	±1% of reading
0.1 Cell Contacting Conductivity	0-3,000 µS/cm	0.1 µS/cm, 0.0001 mS/cm, 0.01 mS/m, 0.0001 S/m, 0.1 ppm	±1% of reading
1.0 Cell Contacting Conductivity	0-30,000 µS/cm	1 µS/cm, 0.001 mS/cm, 0.1 mS/m, 0.0001 S/m, 1 ppm	±1% of reading
10.0 Cell Contacting Conductivity	0-300,000 µS/cm	10 µS/cm, 0.01 mS/cm, 1 mS/m, 0.001 S/m, 10 ppm	±1% of reading
pH	-2 to 16 pH units	0.01 pH units	±0.01% of reading
ORP/Ion Selective Electrode	-1500 to 1500 mV	0.1 mV	±1 mV
Disinfection sensors	-2000 to 1500 mV	0.1 mV	±1 mV
	0 - 2 ppm to 0 - 20,000 ppm	Varies with range and slope	Varies with range and slope
Electrodeless Conductivity	500 - 12,000 µS/cm	1 µS/cm, 0.01 mS/cm, 0.1 mS/m, 0.001 S/m, 1 ppm	±1% of reading
	3,000-40,000 µS/cm	1 µS/cm, 0.01 mS/cm, 0.1 mS/m, 0.001 S/m, 1 ppm	±1% of reading
	10,000-150,000 µS/cm	10 µS/cm, 0.1 mS/cm, 1 mS/m, 0.01 S/m, 10 ppm	±1% of reading
	50,000-500,000 µS/cm	10 µS/cm, 0.1 mS/cm, 1 mS/m, 0.01 S/m, 10 ppm	±1% of reading
	200,000-2,000,000 µS/cm	100 µS/cm, 0.1 mS/cm, 1 mS/m, 0.1 S/m, 100 ppm	±1% of reading
Temperature	23 to 500°F (-5 to 260°C)	0.1°F (0.1°C)	±1% of reading within range

Temperature°C	Range Multiplier%
0	181.3
10	139.9
15	124.2
20	111.1
25	100.0
30	90.6
35	82.5
40	75.5
50	64.3
60	55.6
70	48.9

Temperature°C	Range Multiplier%
80	43.5
90	39.2
100	35.7
110	32.8
120	30.4
130	28.5
140	26.9
150	25.5
160	24.4
170	23.6
180	22.9

Note: Conductivity ranges above apply at 25°C. At higher temperatures, the range is reduced per the range multiplier chart.

MECHANICAL (CONTROLLER)

Enclosure Material	Polycarbonate
Enclosure Rating	NEMA 4X (IP65)
Dimensions	9.5 x 8 x 4" (241 x 203 x 102 mm)
Display	320 x 240 pixel monochrome backlit display with touchscreen
Ambient Temperature	-4 to 131°F (-20 to 55°C)
Storage Temperature	-4 to 176°F (-20 to 80°C)

AGENCY CERTIFICATIONS

Safety:
UL 61010-1:2012, 3rd Edition+Rev:2016
CSA C22.2 No.61010-1:2012, 3rd Ed.+U1;U2
IEC 61010-1:2010 3rd Edition
EN 61010-1:2010 3rd Edition
BS EN 61010-1:2010+A1:2019

EMC:
IEC 61326-1:2012
EN 61326-1:2013
BS EN 61326-1:2013

Note: For EN61000-4-6, EN61000-4-3 the controller met performance criteria B.

This equipment is suitable for use in establishments other than domestic and those directly connected to a low voltage (100-240 VAC) power supply network which supplies buildings used for domestic purposes.

MECHANICAL (SENSORS) (*see graph)

Sensor	Pressure	Temperature	Materials	Process Connections
Electrodeless conductivity	0-150 psi (0-10 bar)*	CPVC: 32-158°F (0 to 70°C)* PEEK: 32-190°F (0 to 88°C)	CPVC, FKM in-line o-ring PEEK, 316 SS in-line adapter	1" NPTM submersion 2" NPTM in-line adapter
pH	0-100 psi (0-7 bar)*	50-158°F (10-70°C)*	CPVC, Glass, FKM o-rings, HDPE, Titanium rod, glass-filled PP tee	1" NPTM submersion 3/4" NPTF in-line tee
ORP	0-100 psi (0-7bar)*	32-158°F (0-70°C)*		
Contacting conductivity (Condensate)	0-200 psi (0-14 bar)	32-248°F (0-120°C)	316SS, PEEK	3/4" NPTM
Contacting conductivity Graphite (Cooling Tower)	0-150 psi (0-10 bar)*	32-158°F (0-70°C)*	Graphite, Glass-filled PP, FKM o-ring	3/4" NPTM
Contacting conductivity SS (Cooling Tower)	0-150 psi (0-10 bar)*	32-158°F (0-70°C)*	316SS, Glass-filled PP, FKM o-ring	3/4" NPTM
Contacting conductivity (Boiler)	0-250 psi (0-17 bar)	32-401°F (0-205°C)	316SS, PEEK	3/4" NPTM
Contacting conductivity (High Pressure Tower)	0-300 psi (0-21 bar)*	32-158°F (0-70°C)*	316SS, PEEK	3/4" NPTM
pH (High Pressure)	0-300 psi (0-21 bar)*	32-275°F (0-135°C)*	Glass, Polymer, PTFE, 316SS, FKM	1/2" NPTM gland
ORP (High Pressure)	0-300 psi (0-21 bar)*	32-275°F (0-135°C)*	Platinum, Polymer, PTFE, 316SS, FKM	1/2" NPTM gland
Free Chlorine/Bromine	0-14.7 psi (0-1 bar)	32-113°F (0-45°C)	PVC, Polycarbonate, silicone rubber, SS, PEEK, FKM, Isoplast	1/4" NPTF Inlet 3/4" NPTF Outlet
Extended pH Range Free Chlorine/Bromine	0-14.7 psi (0-1 bar)	32-113°F (0-45°C)		
Total Chlorine	0-14.7 psi (0-1 bar)	32-113°F (0-45°C)		
Chlorine Dioxide	0-14.7 psi (0-1 bar)	32-131°F (0-55°C)		
Ozone	0-14.7 psi (0-1 bar)	32-131°F (0-55°C)		
Peracetic Acid	0-14.7 psi (0-1 bar)	32-131°F (0-55°C)		
Hydrogen Peroxide	0-14.7 psi (0-1 bar)	32-113°F (0-45°C)		
Flow switch manifold	0-150 psi (0-10 bar) up to 100°F (38°C)* 0-50 psi (0-3 bar) at 140°F (60°C)	32-140°F (0-60°C)*	GFRPP, PVC, FKM, Isoplast	3/4" NPTF
Flow switch manifold (High Pressure)	0-300 psi (0-21 bar)*	32-158°F (0-70°C)*	Carbon steel, Brass, 316SS, FKM	3/4" NPTF

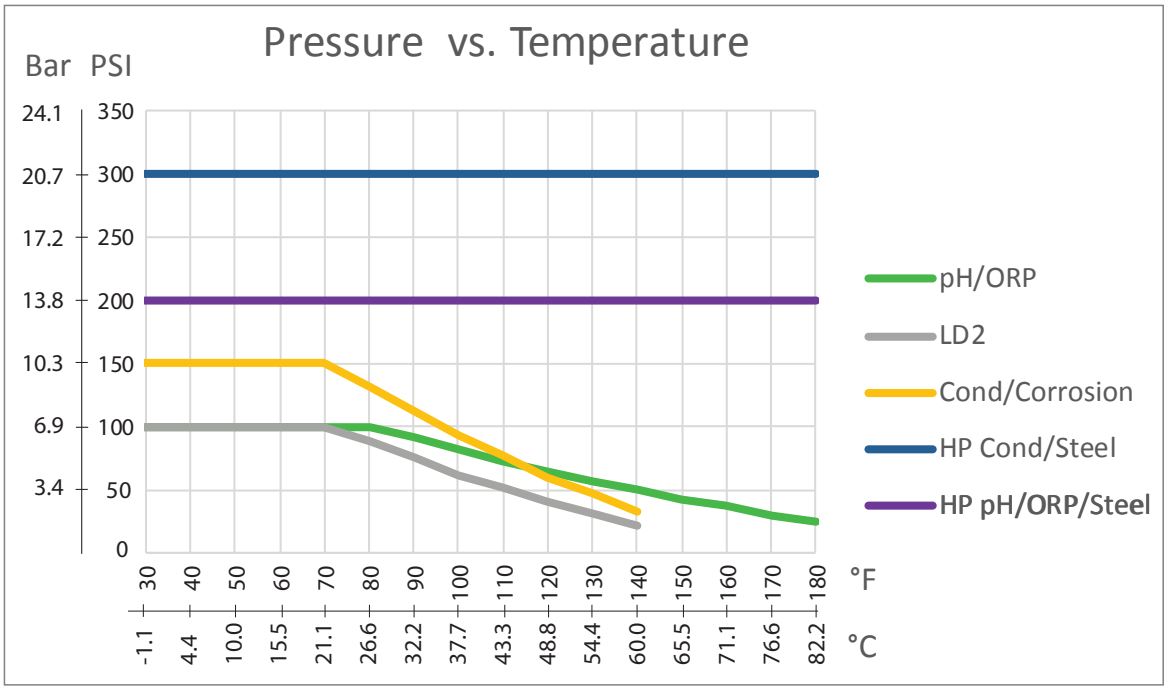

DIMENSIONS

Panel Mounted Flow Switch Manifold Dimensions

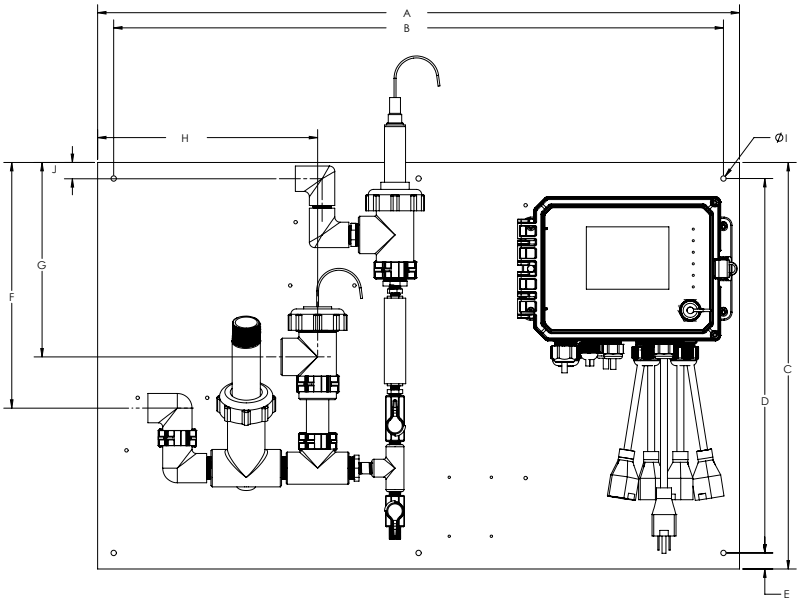

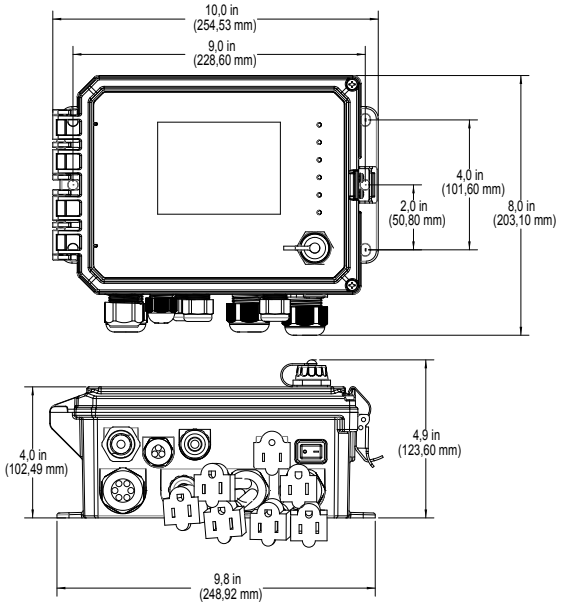

ORDERING INFORMATION

Example: WCT600PCSNE- BI

WDS / WCN / WPH	RELAYS/WIRING	INPUT CARDS	ANALOG OUTPUTS	ETHERNET	-	SENSORS
	WCT600P	CS	N	E		- BI

RELAYS/WIRING

6 powered relays		
	600H	Hardwired
	600P	Prewired with USA cords and pigtails
	600D	Prewired with DIN power cord, no pigtails
2 powered 4 dry relays		
	610H	Hardwired
	610P	Prewired with USA cord and 2 pigtails
	610D	Prewired with DIN power cord, no pigtails
2 opto 4 dry relays		
	620H	Hardwired
	620P	Prewired with USA cord and two 20 ft. pulse cables
	620D	Prewired with DIN power cord, no pigtails
4 opto 2 dry relays		
	640H	Hardwired
	640P	Prewired with USA cord and four 20 ft. pulse cables
	640D	Prewired with DIN power cord, no pigtails

INPUT CARDS

NN	No sensor input cards
SN	One sensor input card
SS	Two sensor input cards
CS	One sensor input card & one combination sensor/analog input card
CN	One combination sensor/analog input card
CA	One combination sensor/analog input card & one dual analog input card
CC	Two combination sensor/analog cards
AN	One dual analog input card
AA	Two dual analog input cards
SA	One sensor input card and one dual analog input card

ANALOG OUTPUTS

N	No analog outputs
A	One dual isolated analog output card

ETHERNET

N	No Ethernet
E	Ethernet card
M	Ethernet card with Modbus/BACnet

WDS DISINFECTION SENSORS

		Type of Input card required
NN	No sensors or flow switch manifold	
PN	Single DIS membrane-style manifold on panel*	S or C
PX	DIS membrane-style manifold plus pH/ORP/cooling tower conductivity tee on panel**	SS or CS or CC
FN	Single DIS membrane-style flow cell/cable, no sensor*	S or C
FF	Two DIS membrane-style flow cell/cable, no Sensors*	SS or CS or CC

WPH pH/ORP SENSORS

		Type of Input card required
NN	No sensors or flow switch manifold	
PN	Single low pressure manifold on panel**	S or C
QN	Single high pressure manifold on panel with 191949*	
PX	Dual low pressure manifold on panel**	SS or CS or CC
QX	Dual high pressure manifold on panel with two 191949*	

*Order 102029 pH and/or 102963 ORP electrodes separately
**Order WEL electrode(s) and preamplifier housing(s) separately

WCN CONDUCTIVITY SENSORS

NN	No sensors or flow switch manifold*	S or C for each sensor to be used

*Order conductivity sensor separately

Example: WCT600PCSNE- BI

WBL WCT	RELAYS/WIRING	INPUT CARDS	ANALOG OUTPUTS	ETHERNET	SENSORS
	WCT600P	CS	N	E	- BI

WBL BOILER SENSORS

		Type of Input card required
NN	No sensor	
AN	Boiler sensor with ATC, K=1.0, 250 psi, 20 ft. cable	S or C
BN	Boiler sensor without ATC, K=1.0, 250 psi, 20 ft. cable	
CN	Condensate sensor with ATC, K=0.1, 200 psi, 10 ft. cable	
DN	Boiler sensor with ATC, K=10, 250 psi, 20 ft. cable	
AA	Two boiler sensors, with ATC, K=1.0, 250 psi, 20 ft. cables	SS or CS or CC
BB	Two boiler sensor without ATC, K=1.0, 250 psi, 20 ft. cables	
CC	Two condensate sensors with ATC, K=0.1, 200 psi, 10 ft. cables	
DD	Two Boiler sensors with ATC, K=10, 250 psi, 20 ft. cables	
AB	Boiler sensor with ATC, K=1.0 and boiler sensor without ATC, K=1.0, 250 psi, 20 ft. cables	
AC	Boiler sensor with ATC, K=1.0 20 ft.cable and Condensate sensor with ATC, K=0.1, 250 psi, 10 ft. cable	
AD	Boiler sensor with ATC, K=1.0 and Boiler sensor with ATC, K=10, 250 psi, 20 ft. cables	
BC	Boiler sensor without ATC, 20 ft. and condensate sensor with ATC, 10 ft. cable	
BD	Boiler sensor without ATC and Boiler sensor with ATC, K=10, 250 psi, 20 ft. cables	
CD	Condensate sensor with ATC, 10 ft. cable and Boiler sensor with ATC, K=10, 250 psi, 20 ft. cable	

*Order disinfection sensor(s) separately
**Order disinfection sensor and WEL electrode and preamplifier housing or cooling tower conductivity sensor separately

WCT COOLING TOWER SENSORS

			Type of Input card required
NN		No sensor	
AN		Inline graphite contacting conductivity	S or C
BN		Graphite contacting conductivity + Flow Switch manifold on panel	
CN		High pressure contacting conductivity	
DN		High pressure contacting conductivity + Flow Switch manifold on panel	
EN		Inline 316SS contacting conductivity	
FN		316SS contacting conductivity + Flow Switch manifold on panel	
GN		Inline electrodeless conductivity	S
HN		Electrodeless conductivity + Flow Switch manifold on panel	
Graphite contacting conductivity + Flow Switch manifold on panel			
	BA	+ Flat pH Cartridge no ATC	SS, CS or CC
	BB	+ Rod ORP Cartridge no ATC	
	BC	+ Flat ORP Cartridge no ATC	
	BD	+ Little Dipper	SA or C
	BH	+ Flat pH Cartridge no ATC + Little Dipper	CS or CC
	BI	+ Rod ORP Cartridge no ATC + Little Dipper	
	BJ	+ Flat ORP Cartridge no ATC + Little Dipper	
	BK	+ Little Dipper with Makeup graphite conductivity with threaded adapter	
	BQ	+ Pyxis PTSA	SA or C
	BR	+ WEL-PHF no ATC + Pyxis PTSA	CS or CC
	BS	+ WEL-MVR no ATC + Pyxis PTSA	CS or CC
	BT	+ WEL-MVF no ATC + Pyxis PTSA	CS or CC
	BU	+ Pyxis PTSA with Makeup graphite conductivity with threaded adapter	CS or CC
	B1	+ Pyxis Polymer	SA or C
	B2	+ WEL-PHF no ATC + Pyxis Polymer	CS or CC
	B3	+ WEL-MVR no ATC + Pyxis Polymer	CS or CC
	B4	+ WEL-MVF no ATC + Pyxis Polymer	CS or CC
	B5	+ Pyxis Polymer with Makeup graphite conductivity with threaded adapter	CS or CC
	B6	+ Pyxis Polymer+PTSA	SA or CC
	B7	+ WEL-PHF no ATC + Pyxis PTSA+Polymer	CC
	B8	+ WEL-MVR no ATC + Pyxis PTSA+Polymer	CC
	B9	+ WEL-MVF no ATC + Pyxis PTSA+Polymer	CC
	B0	+ Pyxis PTSA+Polymer with Makeup graphite conductivity with threaded adapter	CC

WCT COOLING TOWER SENSORS

			Type of Input card required
High pressure contacting conductivity + Flow Switch manifold on panel			
	DE	+ pH &191949	SS, CS or CC
	DF	+ ORP & 191949	
316SS contacting conductivity + Flow Switch manifold on panel			
	FA	+ Flat pH Cartridge no ATC	SS, CS or CC
	FB	+ Rod ORP Cartridge no ATC	
	FC	+ Flat ORP Cartridge no ATC	
	FD	+ Little Dipper	SA or C
	FH	+ Flat pH Cartridge no ATC + Little Dipper	CS or CC
	FI	+ Rod ORP Cartridge no ATC + Little Dipper	
	FJ	+ Flat ORP Cartridge no ATC + Little Dipper	
	FQ	+ Pyxis PTSA	SA or C
	FR	+ WEL-PHF no ATC + Pyxis PTSA	CS or CC
	FS	+ WEL-MVR no ATC + Pyxis PTSA	CS or CC
	FT	+ WEL-MVF no ATC + Pyxis PTSA	CS or CC
	F1	+ Pyxis Polymer	SA or C
	F2	+ WEL-PHF no ATC + Pyxis Polymer	CS or CC
	F3	+ WEL-MVR no ATC + Pyxis Polymer	CS or CC
	F4	+ WEL-MVF no ATC + Pyxis Polymer	CS or CC
	F5	+ Pyxis Polymer with Makeup graphite conductivity with threaded adapter	CS or CC
	F6	+ Pyxis PTSA + Polymer	SA or CC
	F7	+ WEL-PHF no ATC + Pyxis PTSA+Polymer	CC
	F8	+ WEL-MVR no ATC + Pyxis PTSA+Polymer	CC
	F9	+ WEL-MVF no ATC + Pyxis PTSA+Polymer	CC
	F0	+ Pyxis PTSA + Polymer with Makeup graphite conductivity with threaded adapter	CC
Electrodeless conductivity + Flow Switch manifold on panel			
	HA	+ Flat pH Cartridge no ATC	SS or CS
	HB	+ Rod ORP Cartridge no ATC	
	HC	+ Flat ORP Cartridge no ATC	
	HD	+ Little Dipper	SA or CS
	HH	+ Flat pH Cartridge no ATC + Little Dipper	CS
	HI	+ Rod ORP Cartridge no ATC + Little Dipper	
	HJ	+ Flat ORP Cartridge no ATC + Little Dipper	
	HK	+ Little Dipper with Makeup graphite conductivity with threaded adapter	
	HQ	+ Pyxis PTSA	SA or CS
	HR	+ WEL-PHF no ATC + Pyxis PTSA	CS
	HS	+ WEL-MVR no ATC + Pyxis PTSA	CS
	HT	+ WEL-MVF no ATC + Pyxis PTSA	CS
	HU	+ Pyxis PTSA with Makeup graphite conductivity with threaded adapter	CS
	H1	+ Pyxis Polymer	SA or CS
	H2	+ WEL-PHF no ATC + Pyxis Polymer	CS
	H3	+ WEL-MVR no ATC + Pyxis Polymer	CS
	H4	+ WEL-MVF no ATC + Pyxis Polymer	CS
	H5	+ Pyxis Polymer with Makeup graphite conductivity with threaded adapter	CS
	H6	+ Pyxis Polymer+PTSA	SA

WALCHEM
IWAKI America Inc.

P/N 180625.N February 2022

Walchem, Iwaki America Inc.
Five Boynton Road Hopping Brook Park | Holliston, MA 01746 USA | Phone 508-429-1110 | walchem.com